OLAF



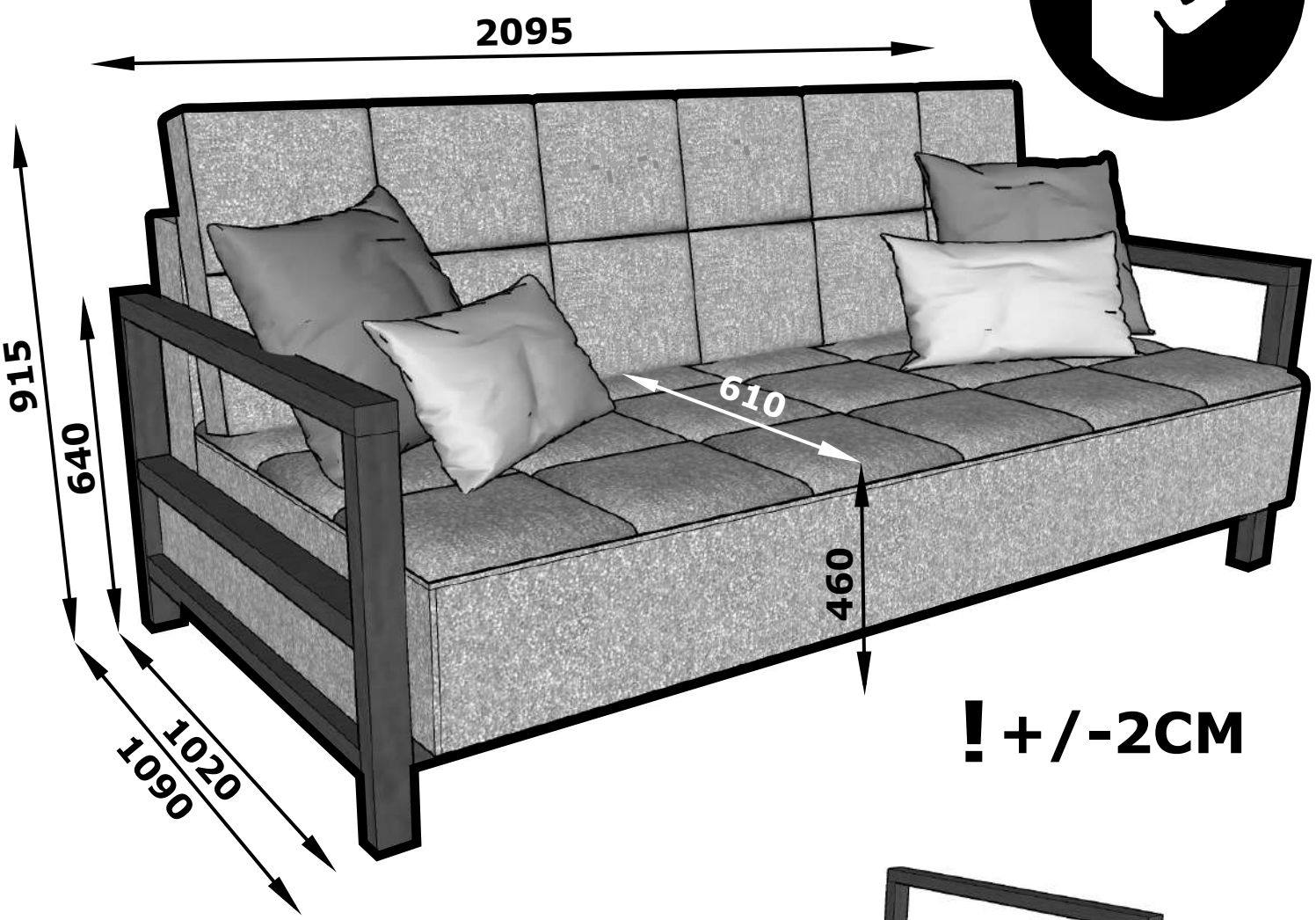

! +/-2CM

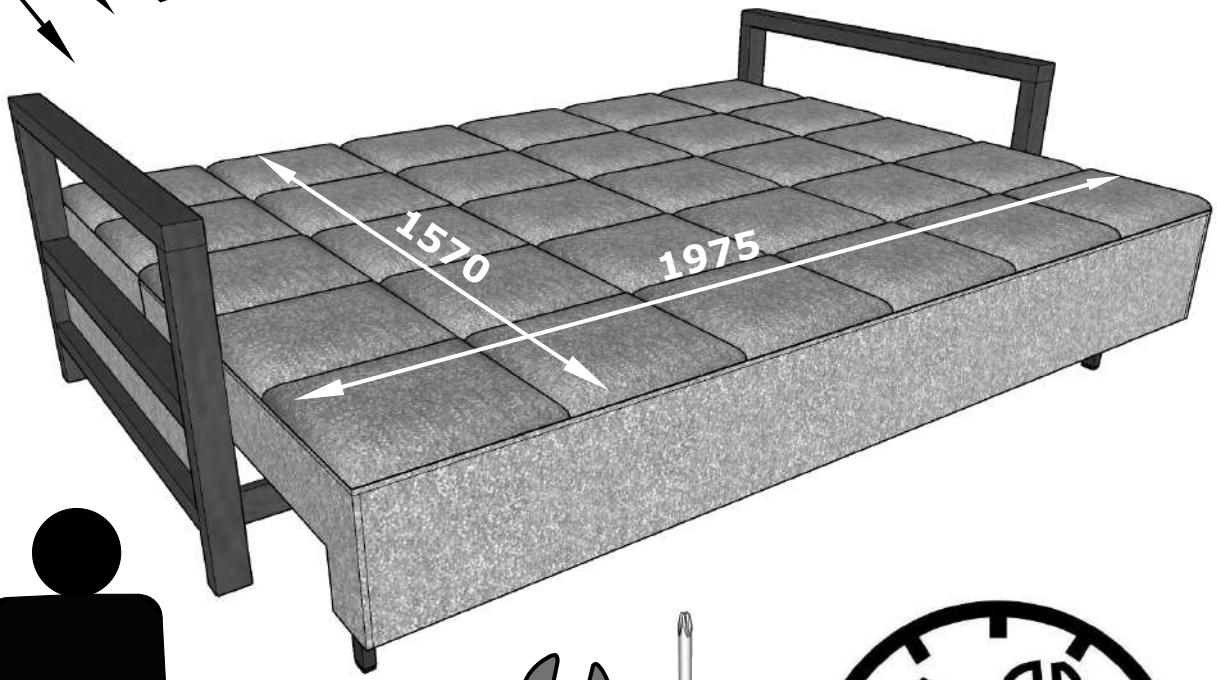

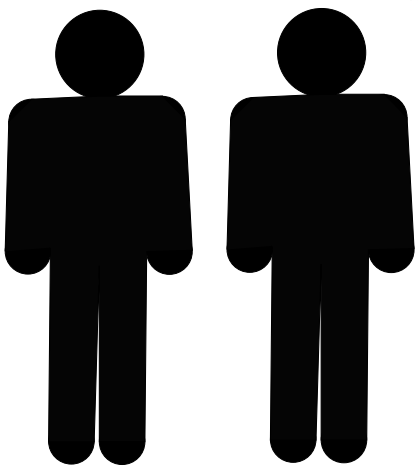

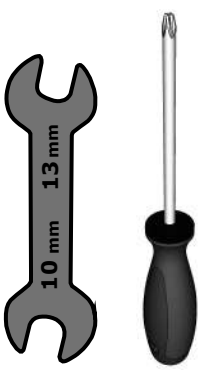



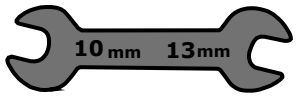



1/3

	L	B	H	PCS	
1	1980	950	350	x1	1/5
2	1980	600	160	x1	2/5
3	1020	640	120	x1	3/5

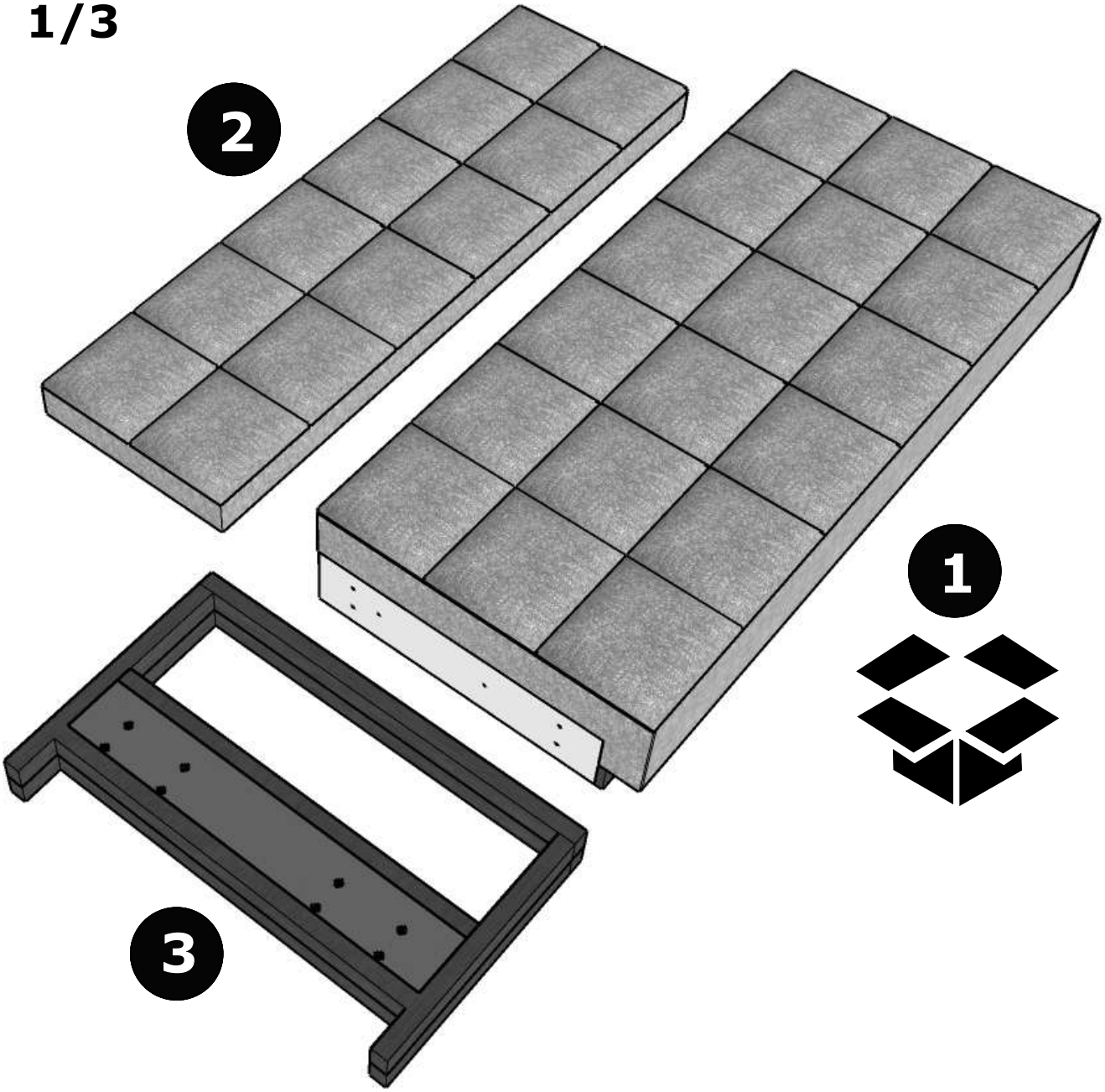

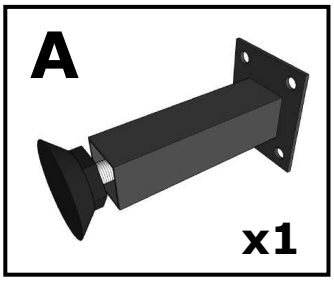

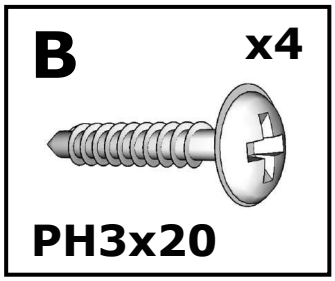

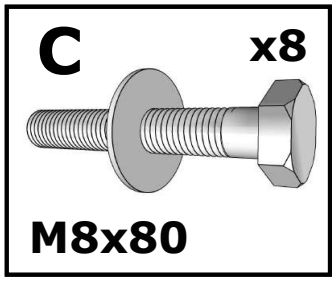

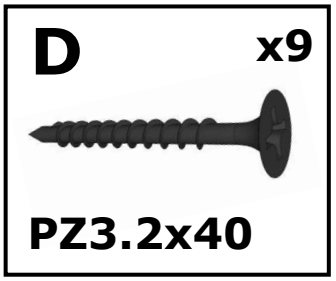

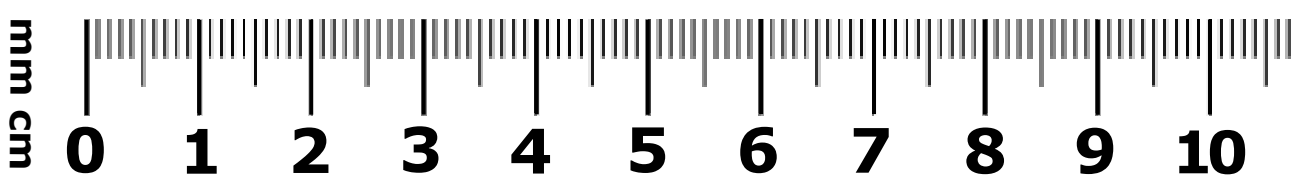

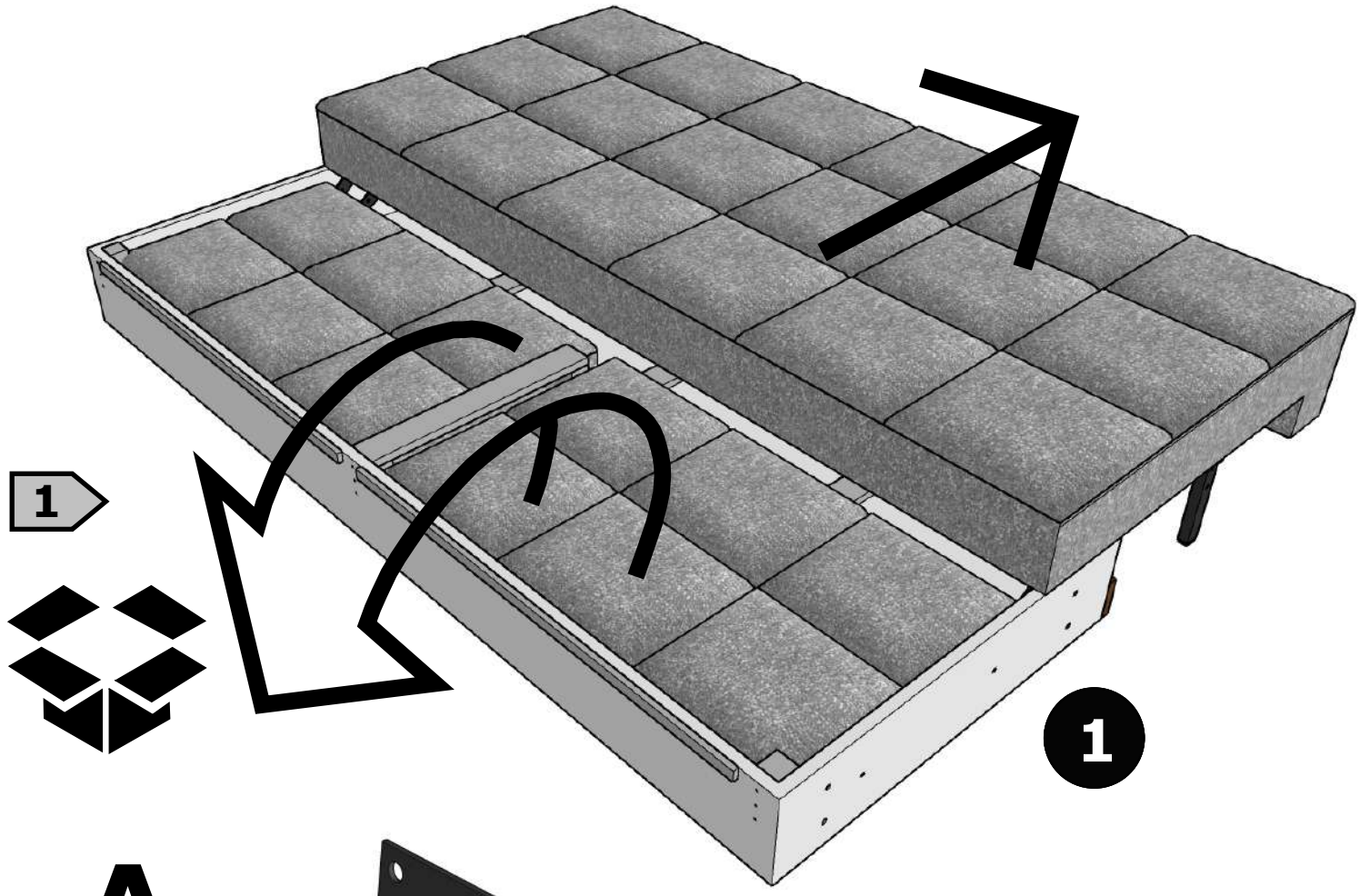
1
1

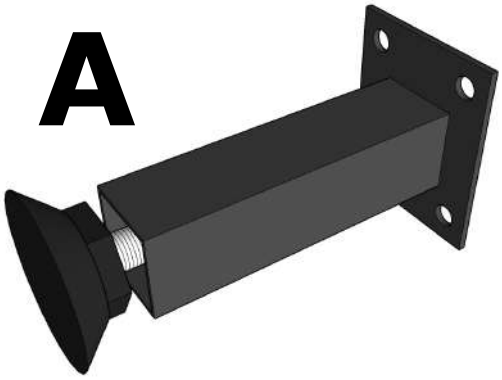
A

B
B
B
B
A
2
1
B

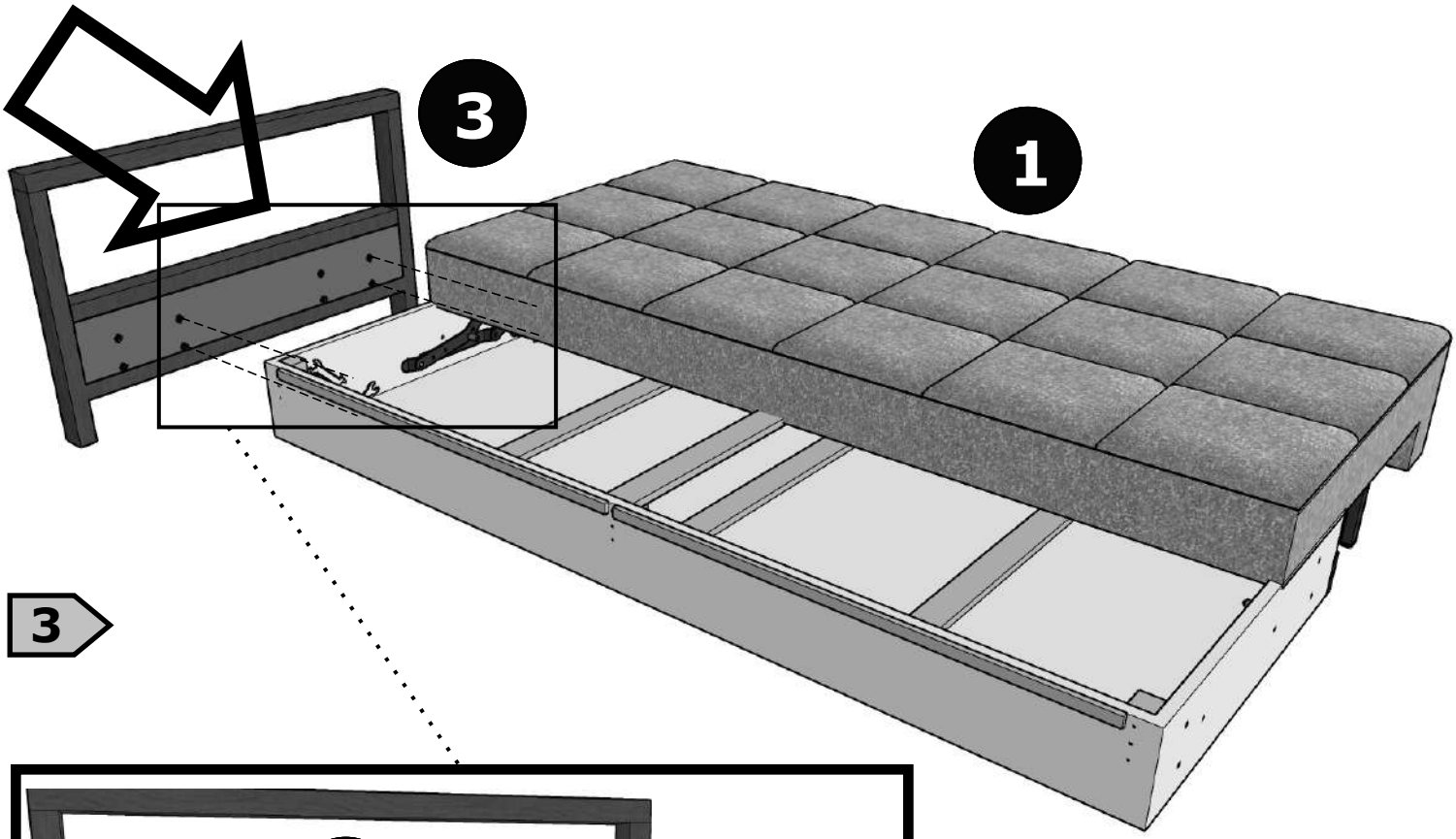

3

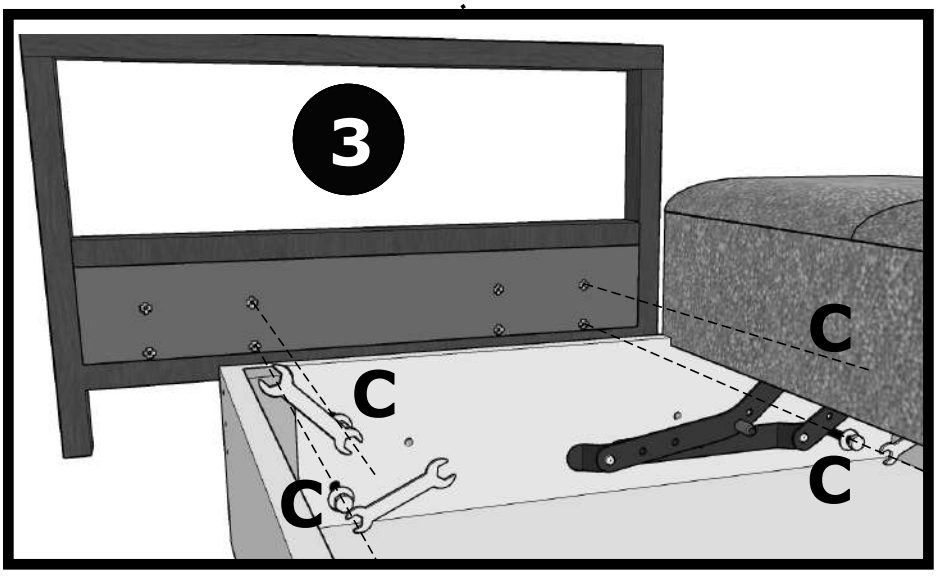

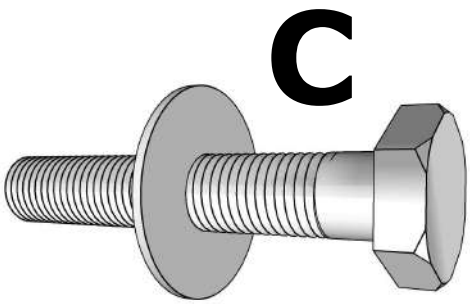

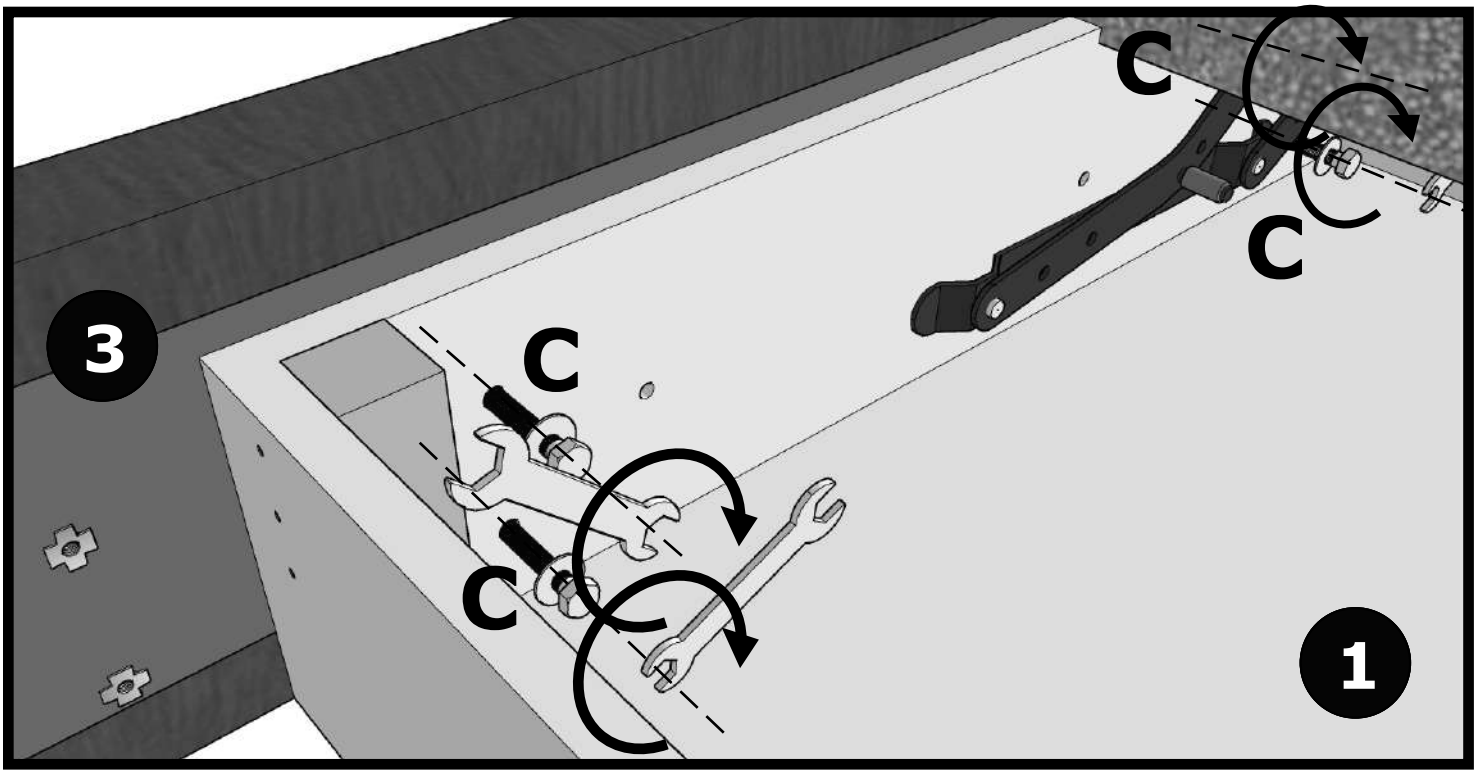

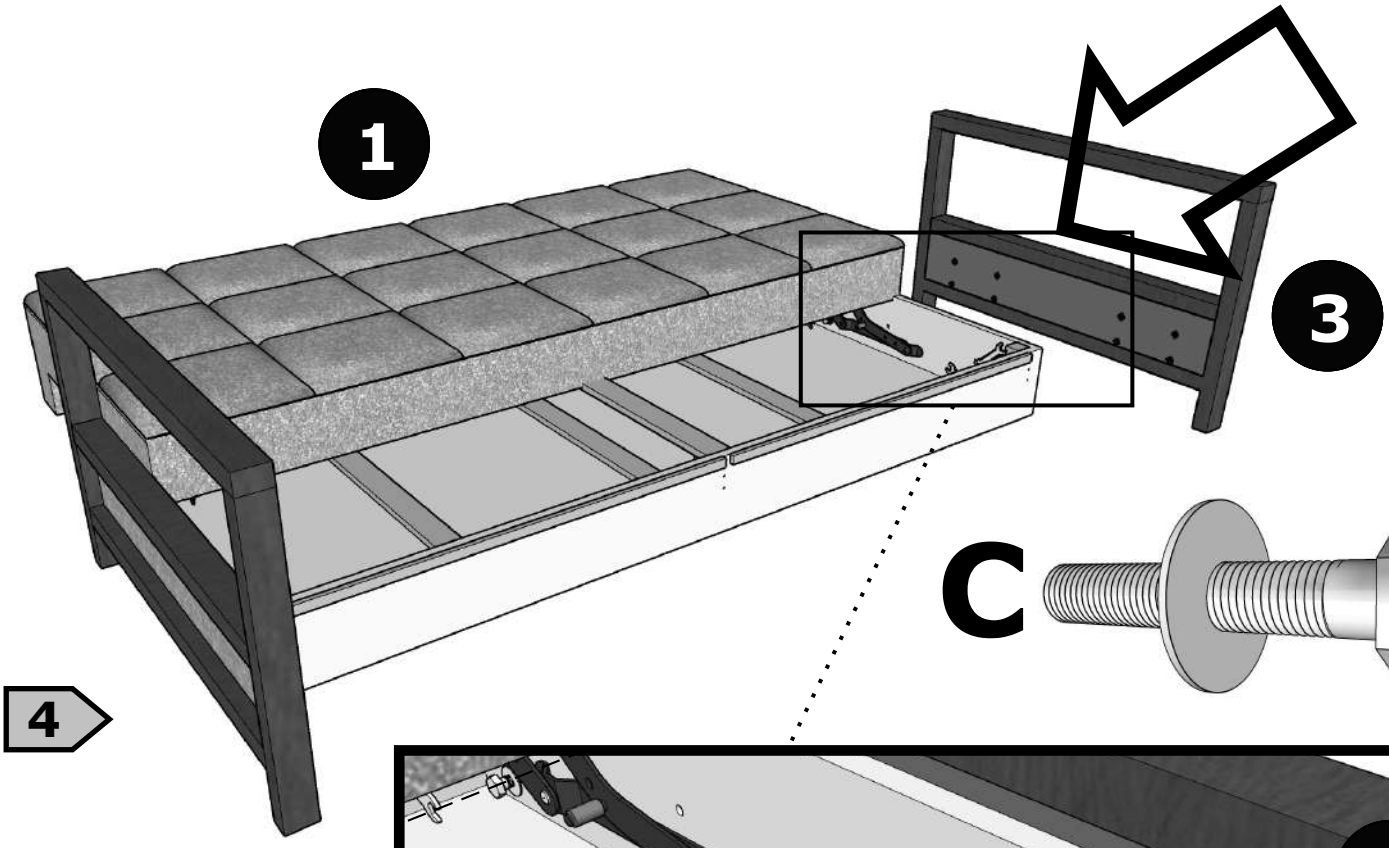
1
3
C
4

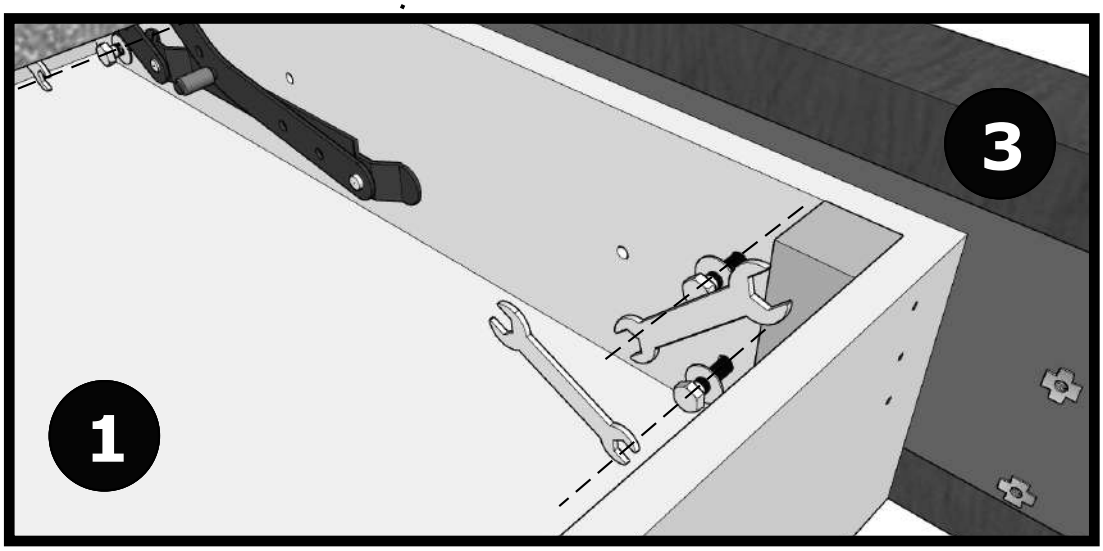
3
1

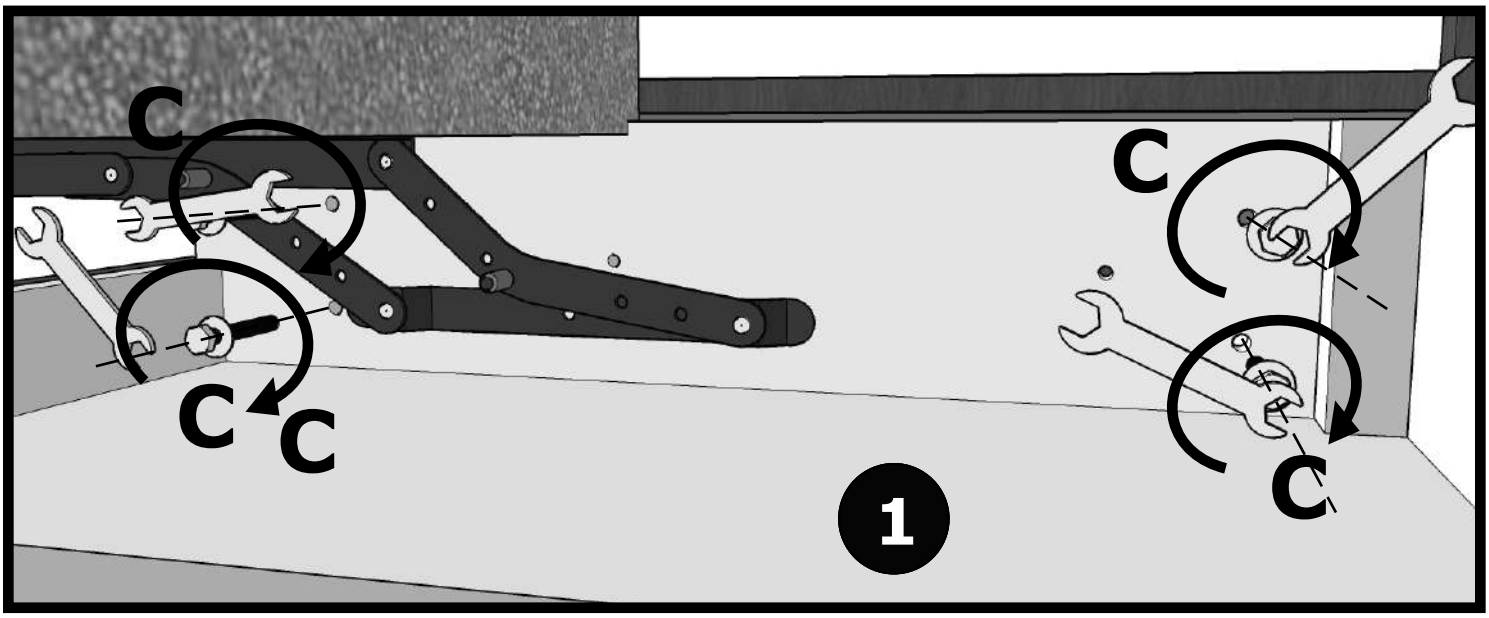
C
C
C
C
C
1

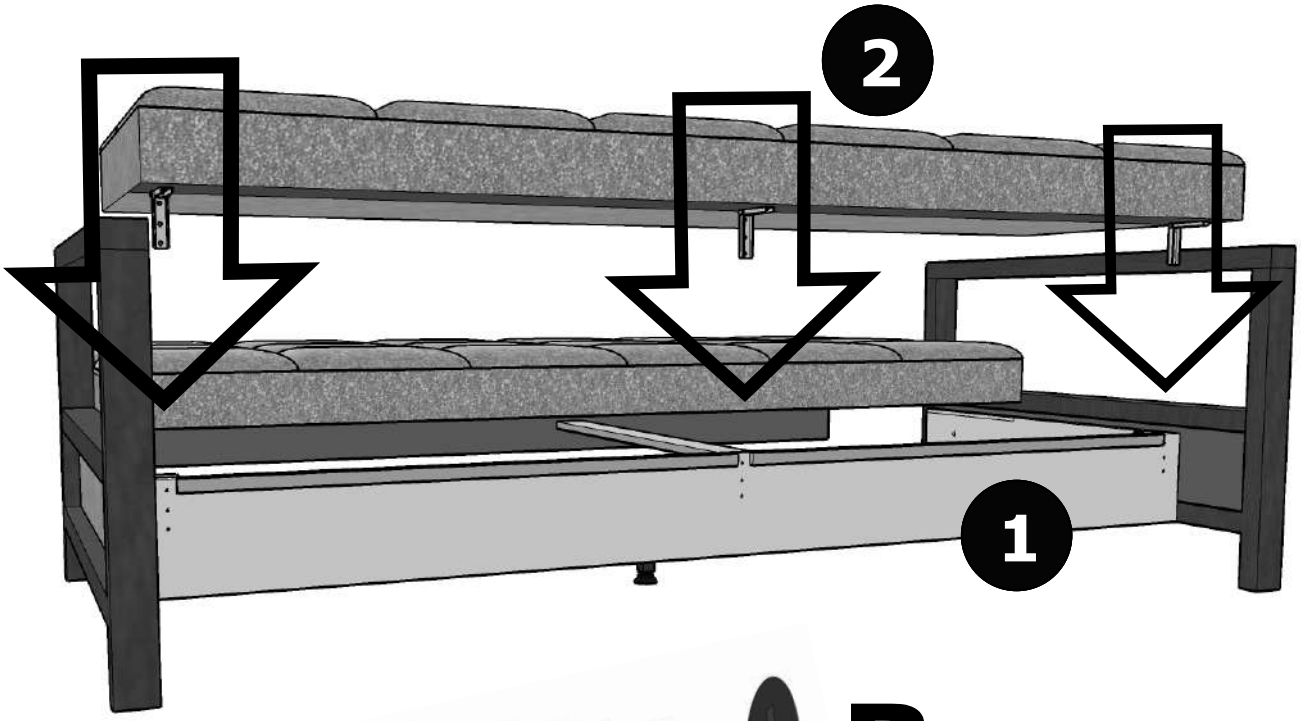

5



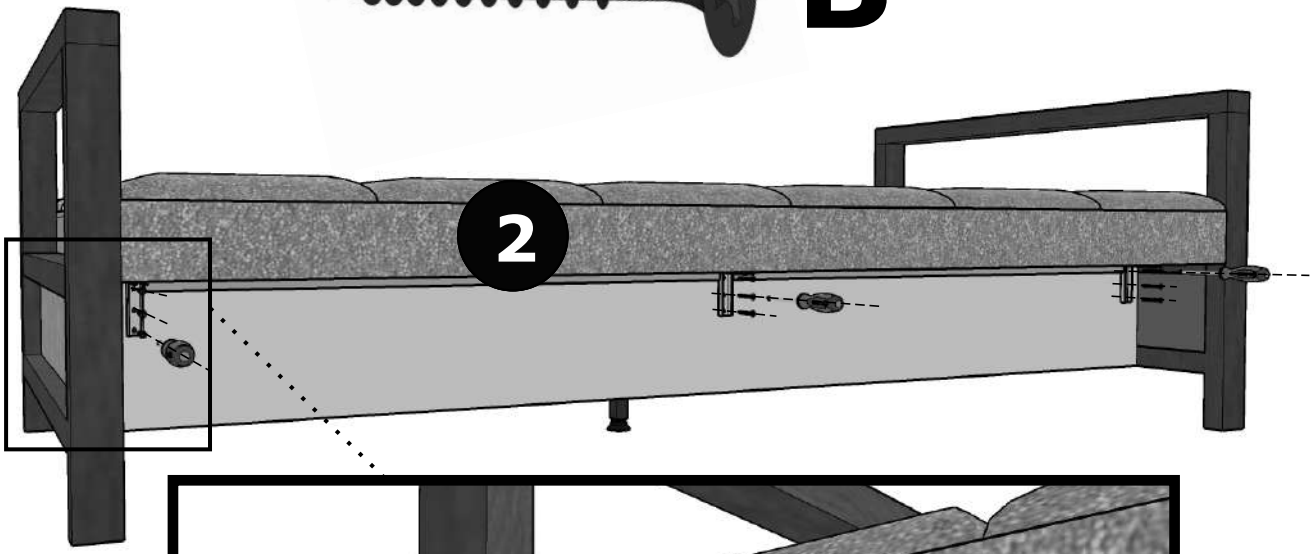

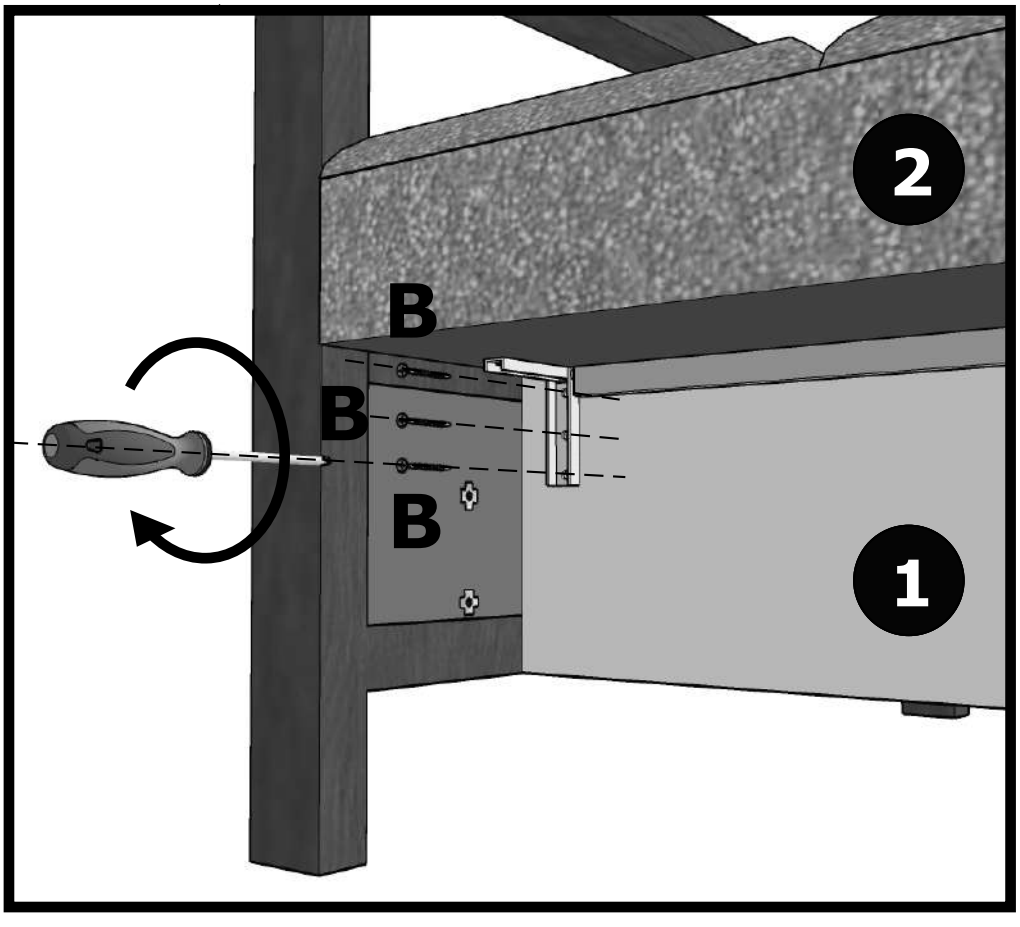

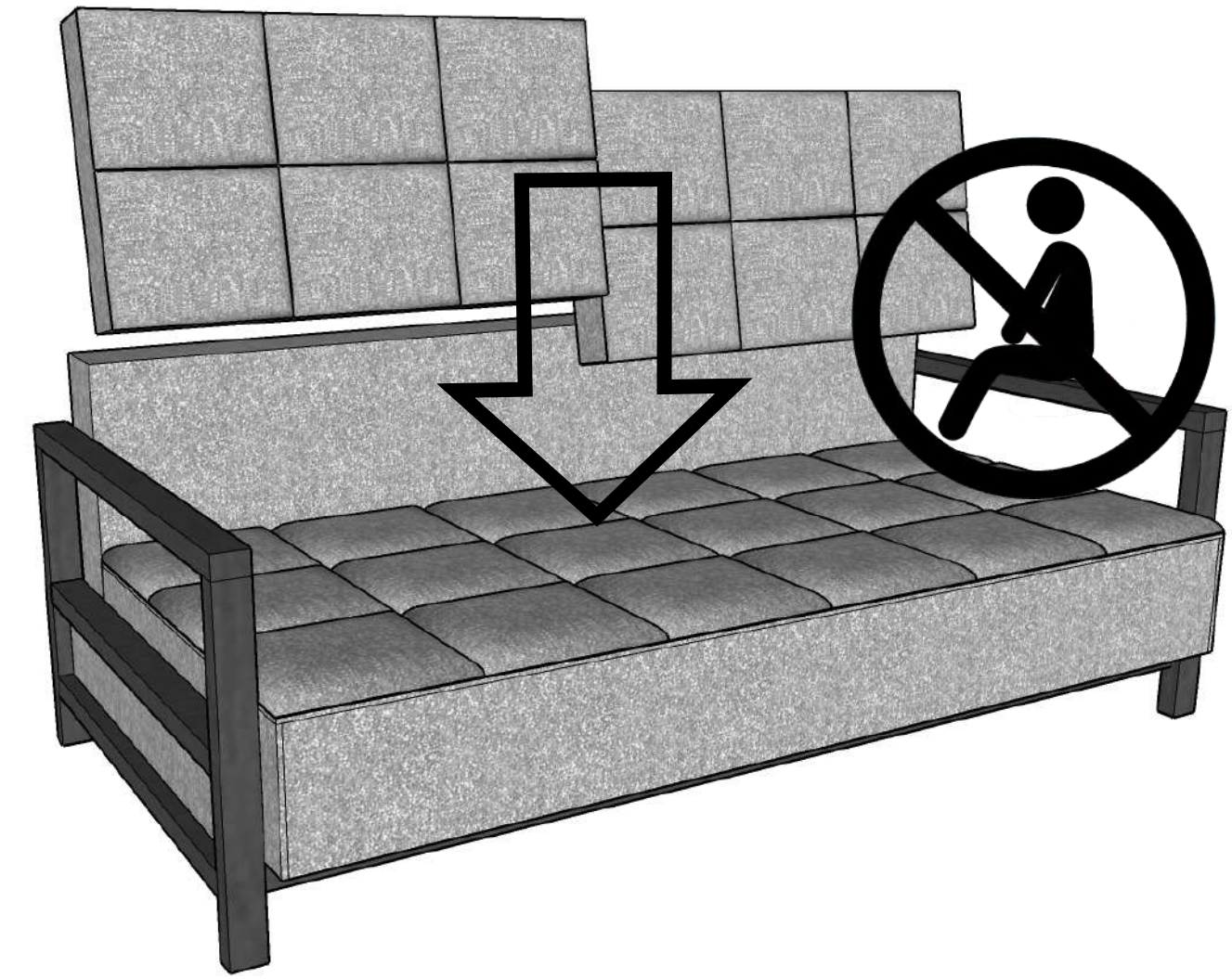

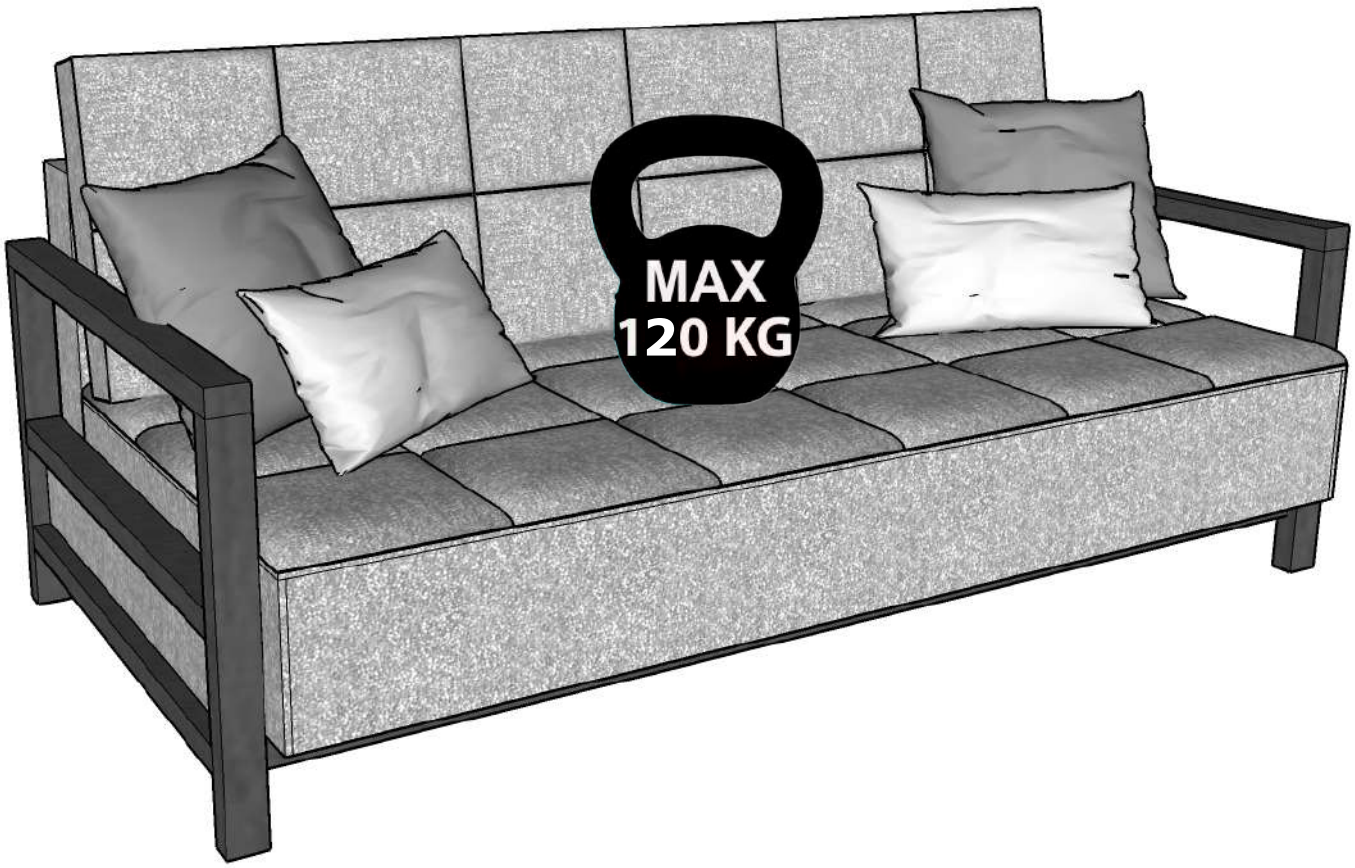
MAX
120 KG



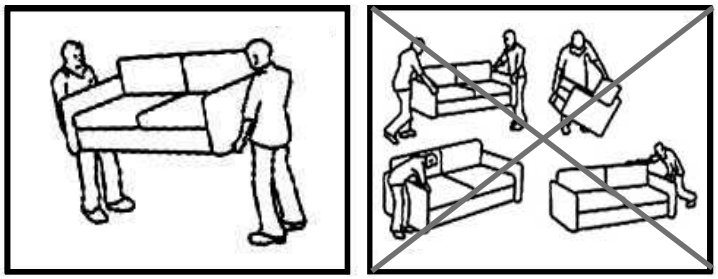

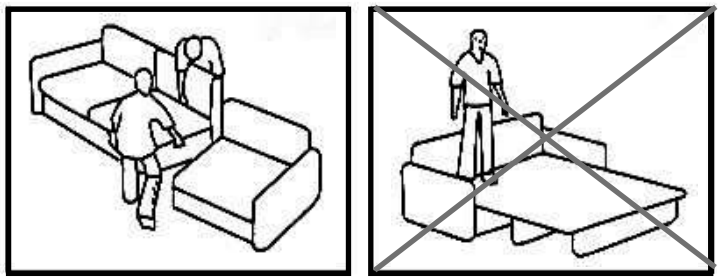

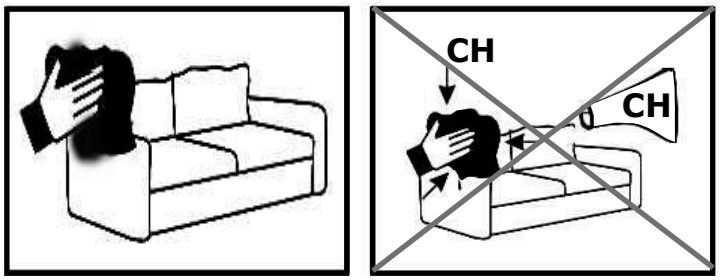
CH
CH


22
PAP



