MARK UD

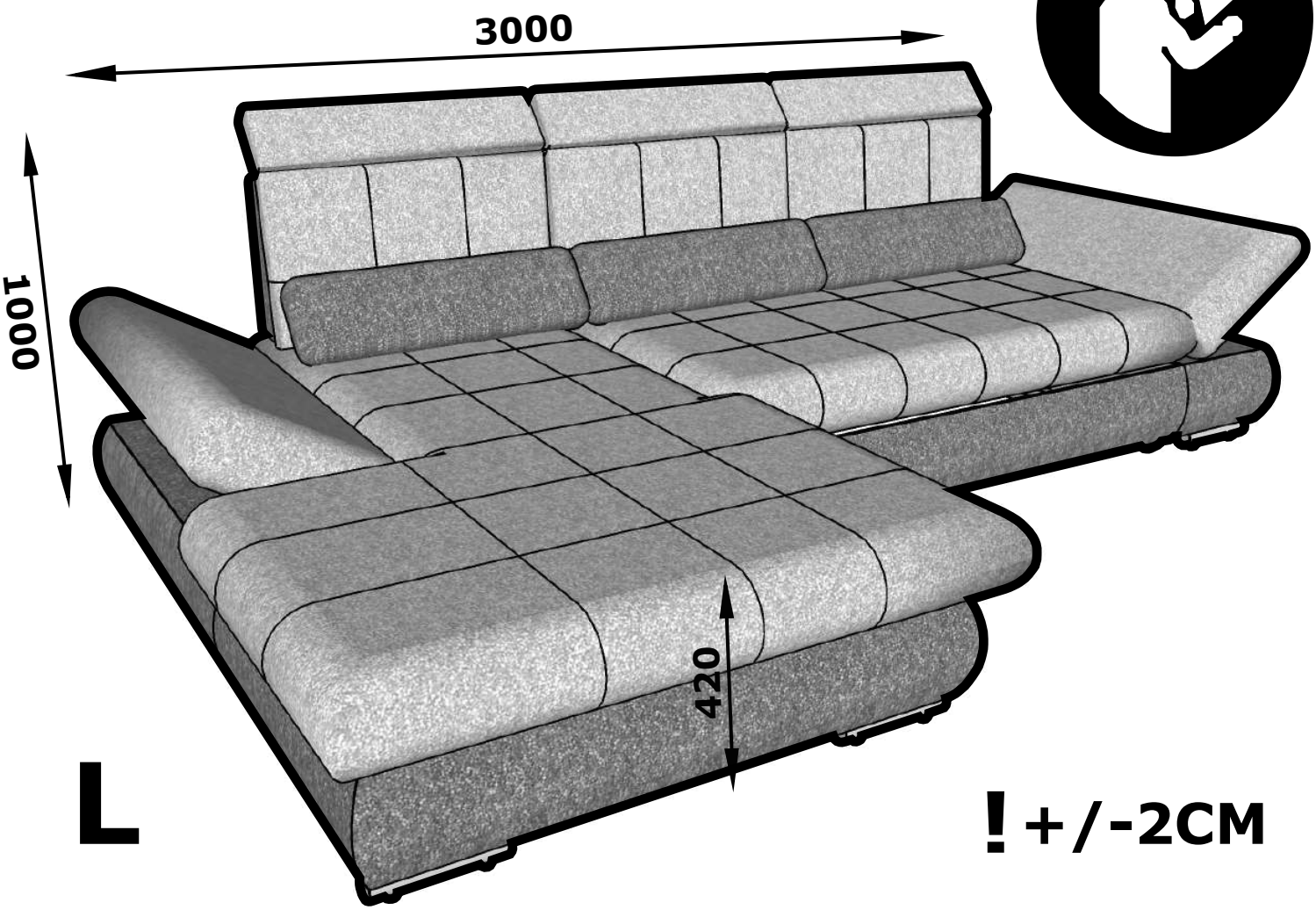

L

! +/-2CM

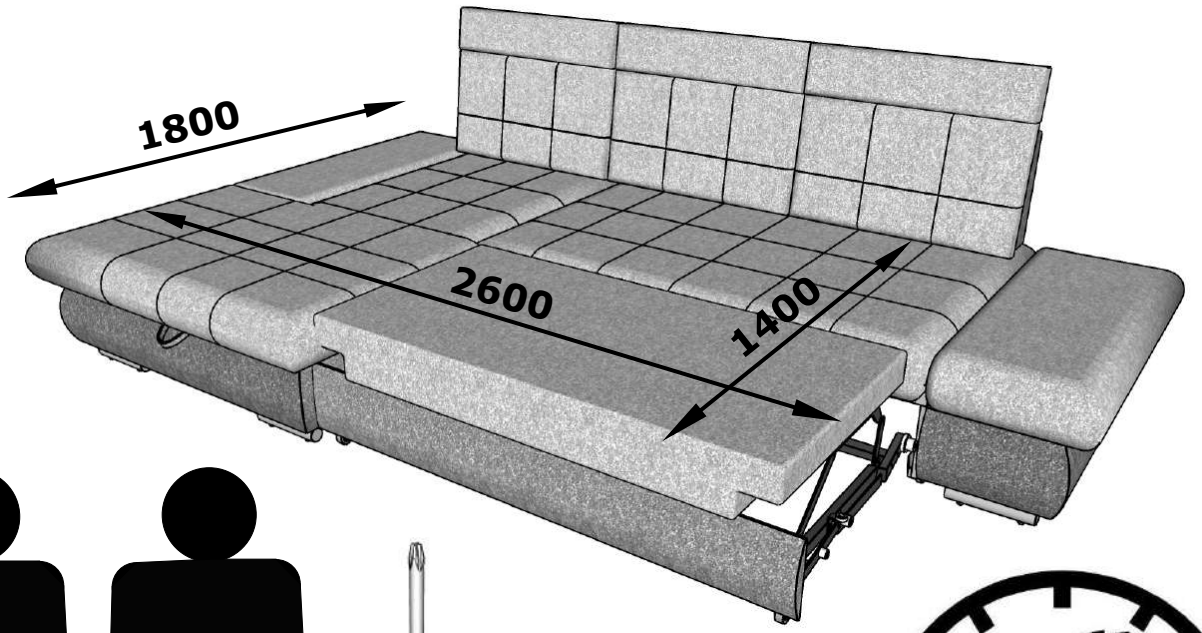

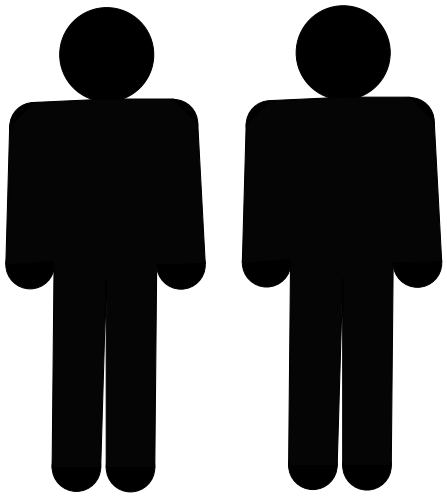





	L	B	H	PCS	
1	1800	1140	420	x1	1/4
2	1440	1000	420	x1	2/4
3	1040	400	420	x1	3/4
4	1260	400	420	x1	4/4

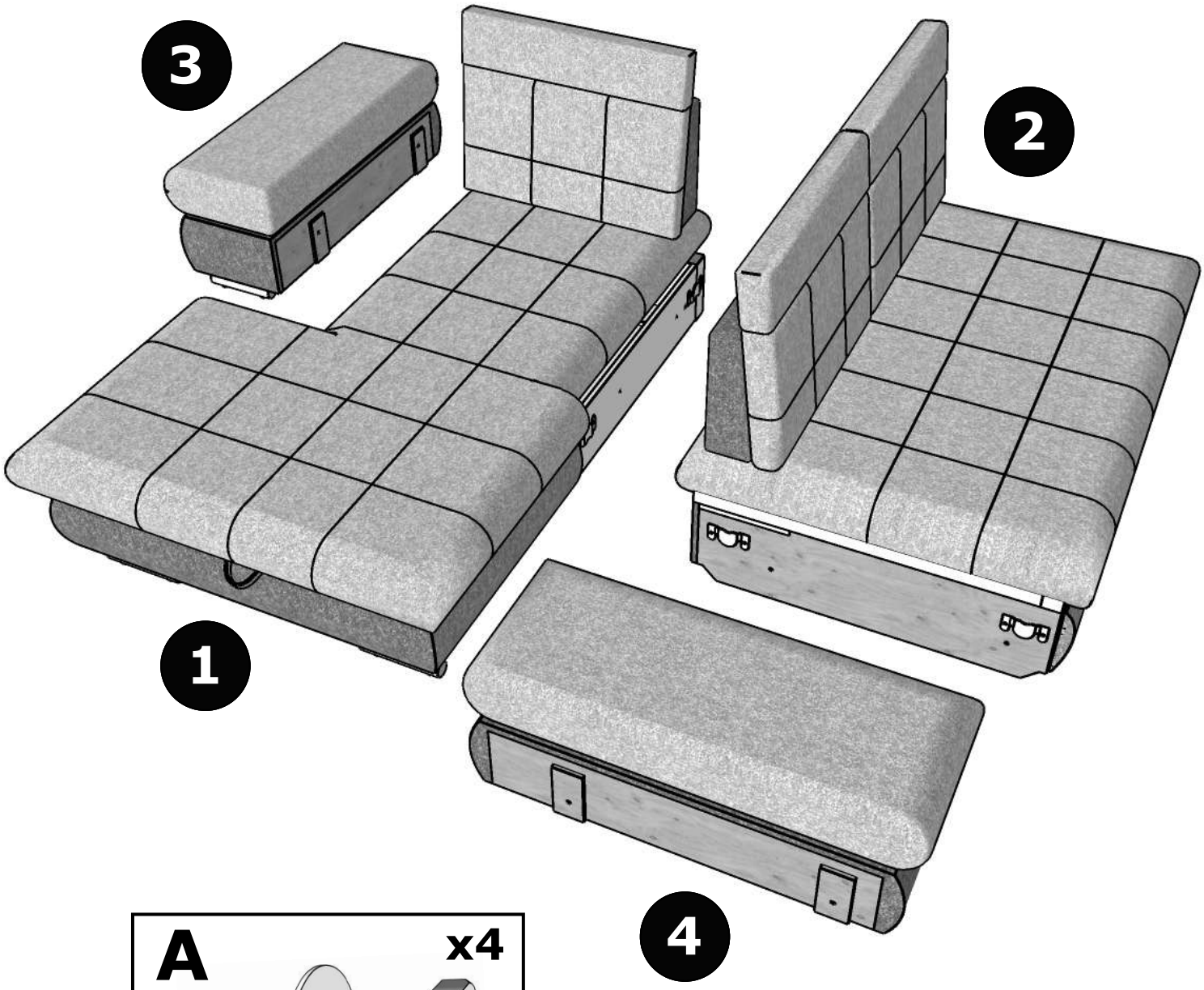

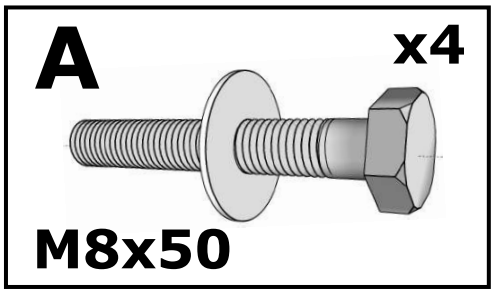

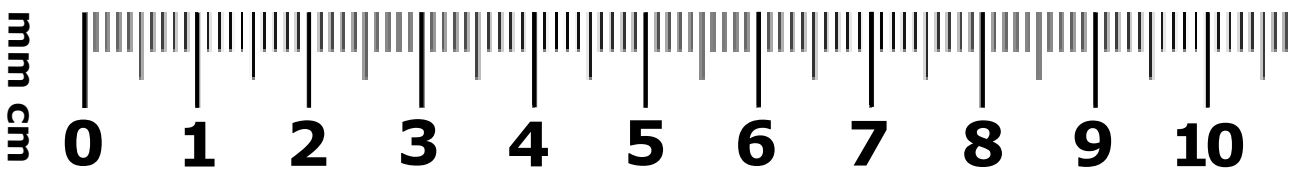

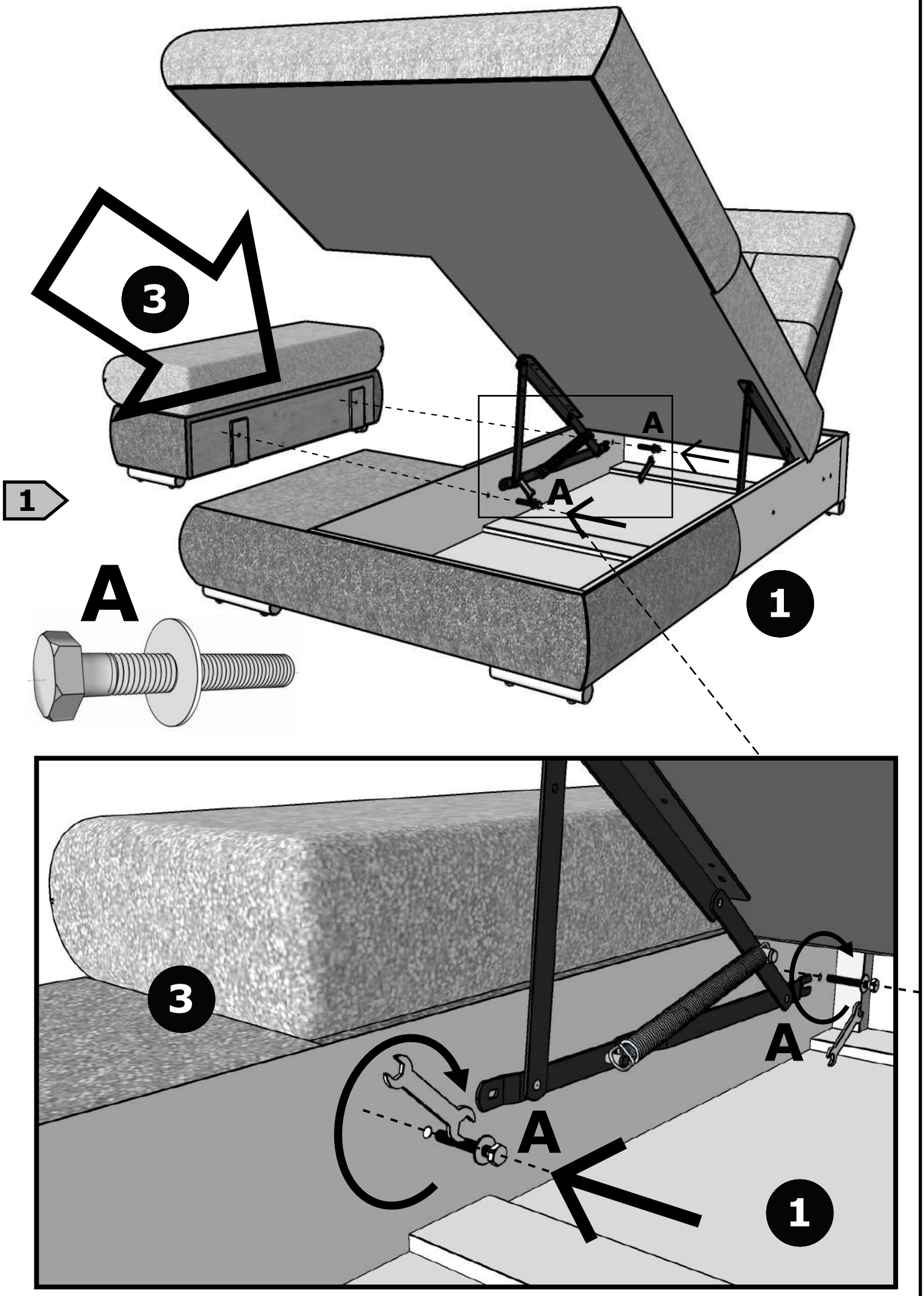
3
A
A
1
A
1
3
A
A
1

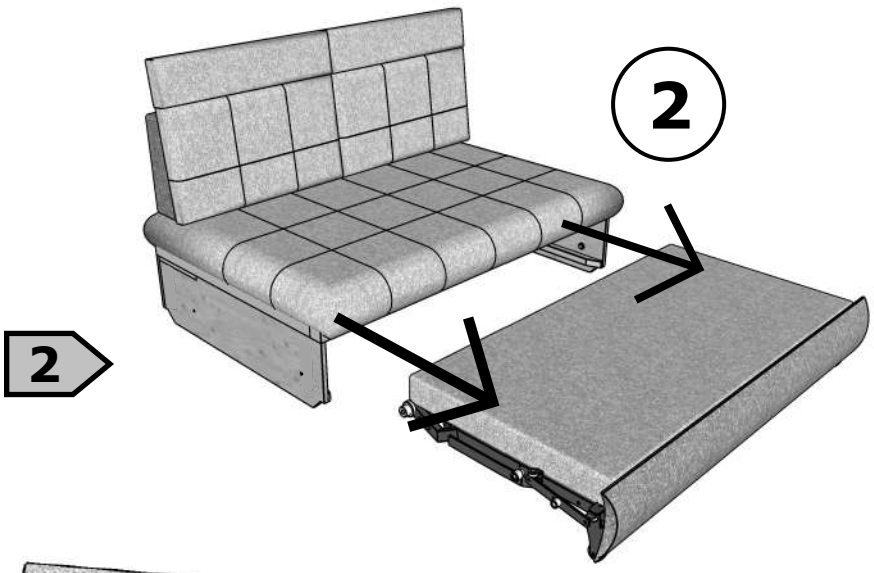

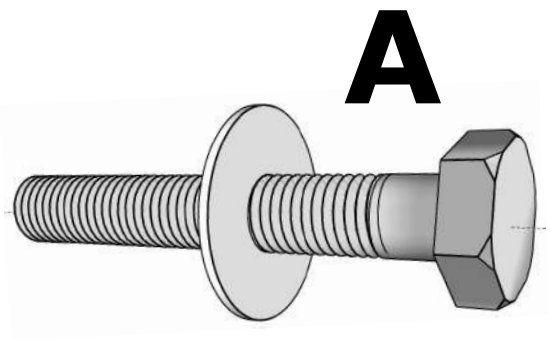

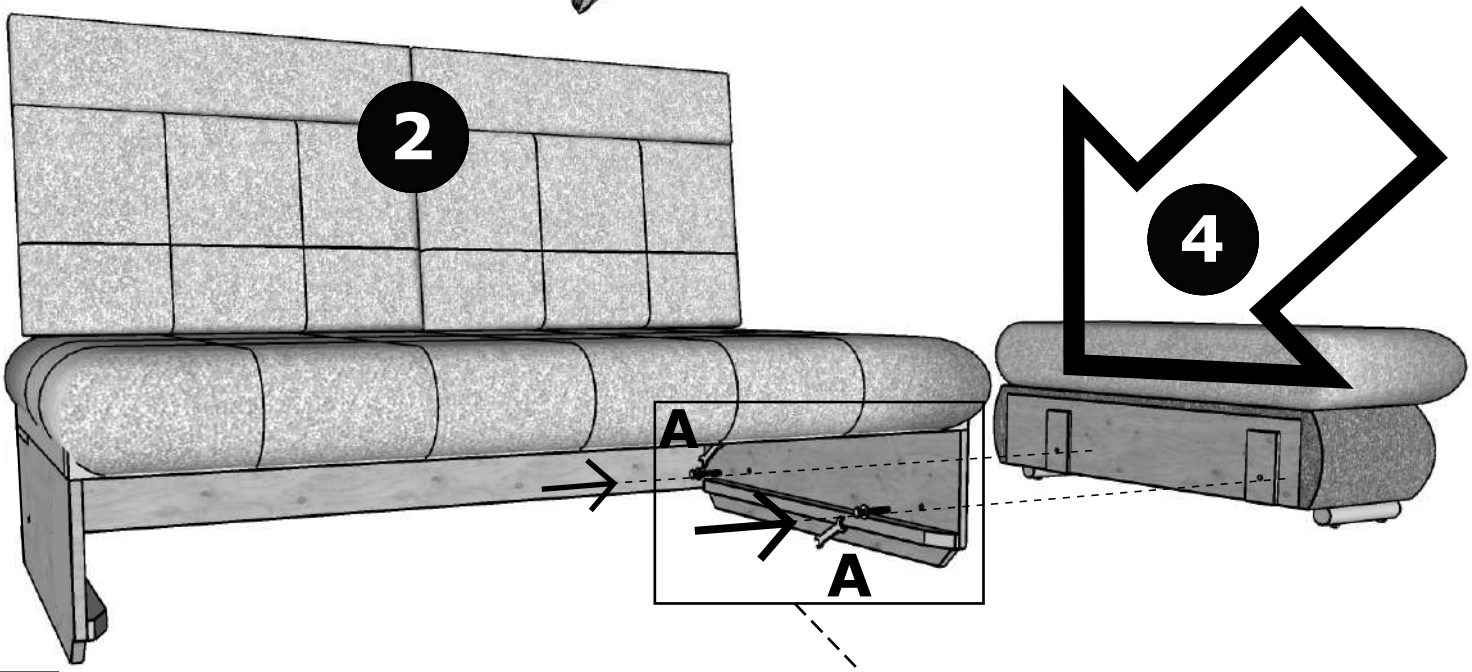

3

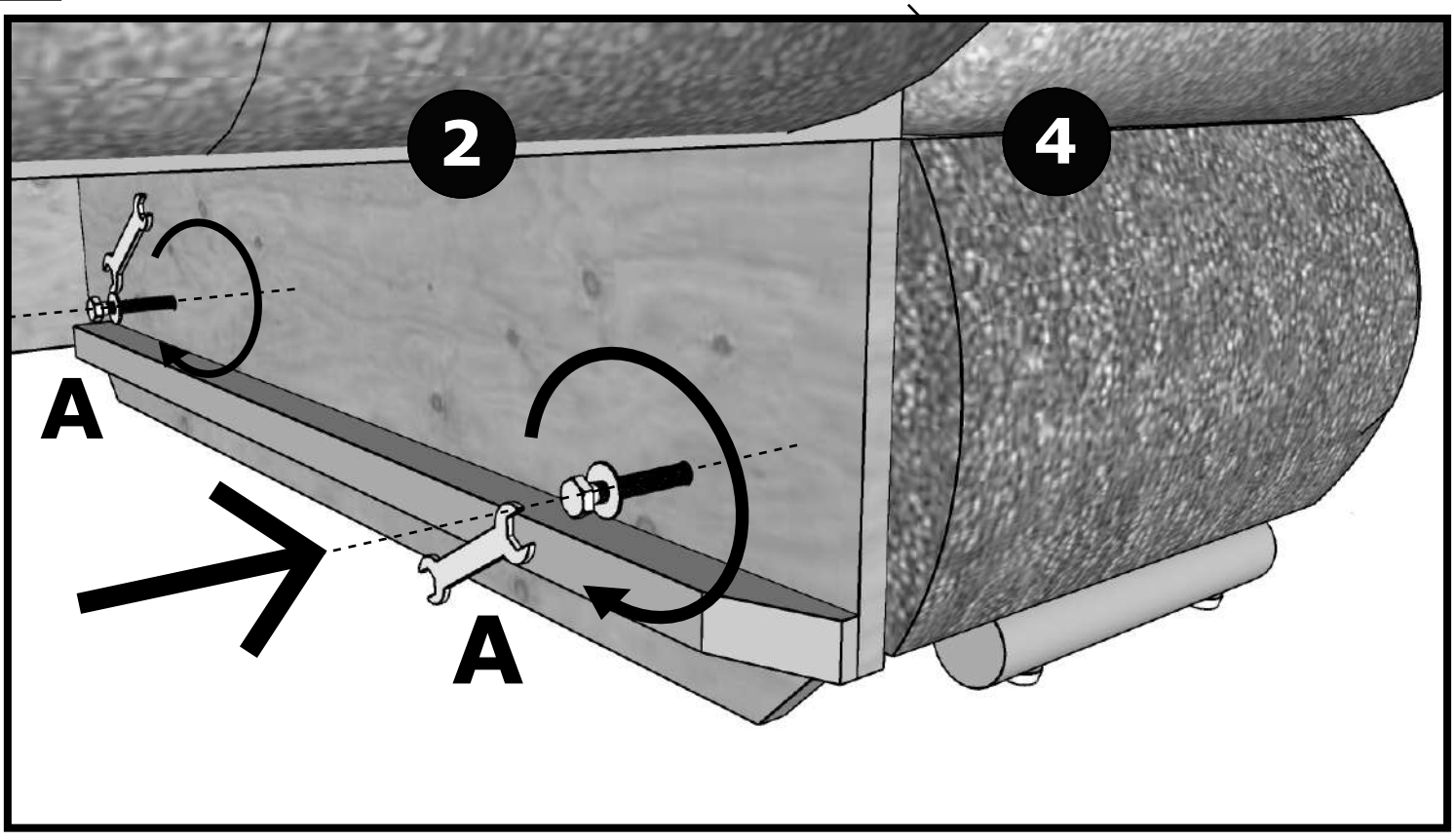

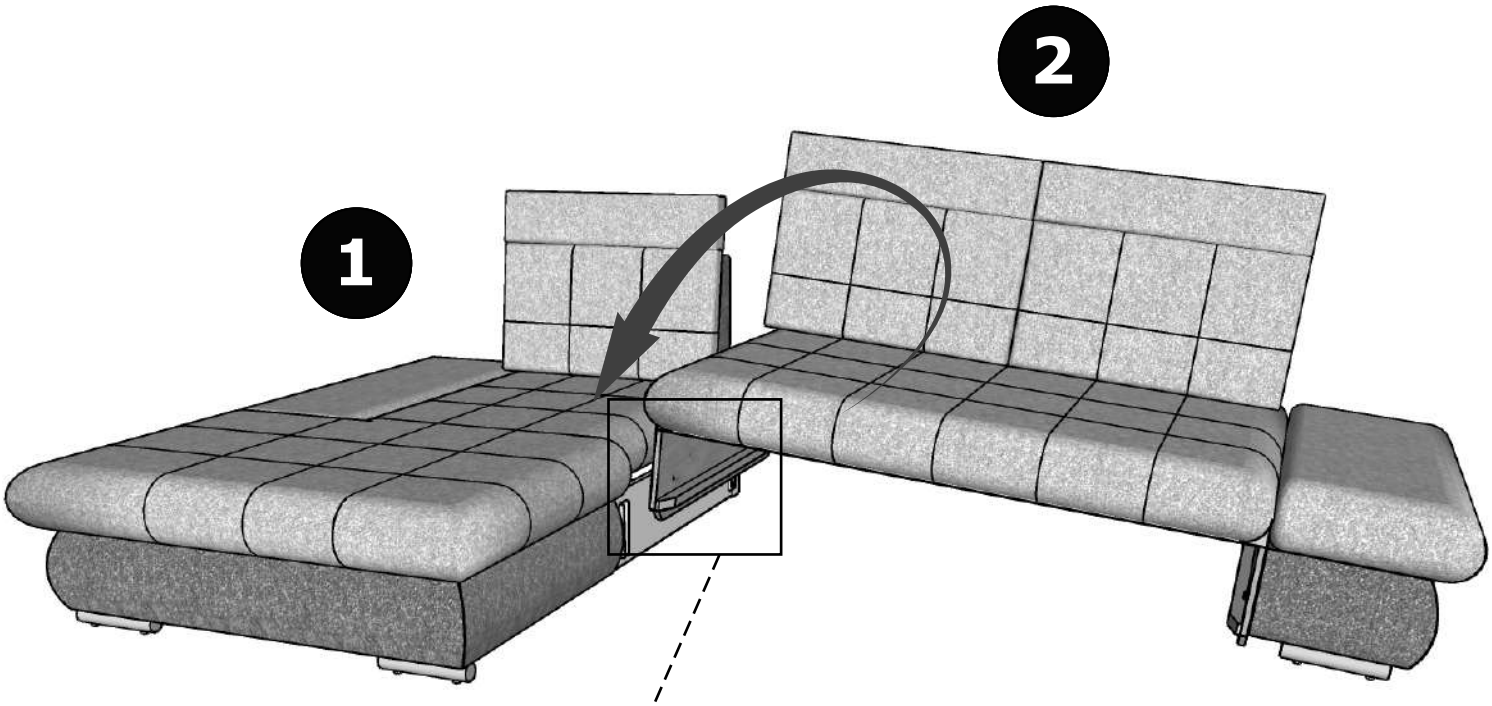

4

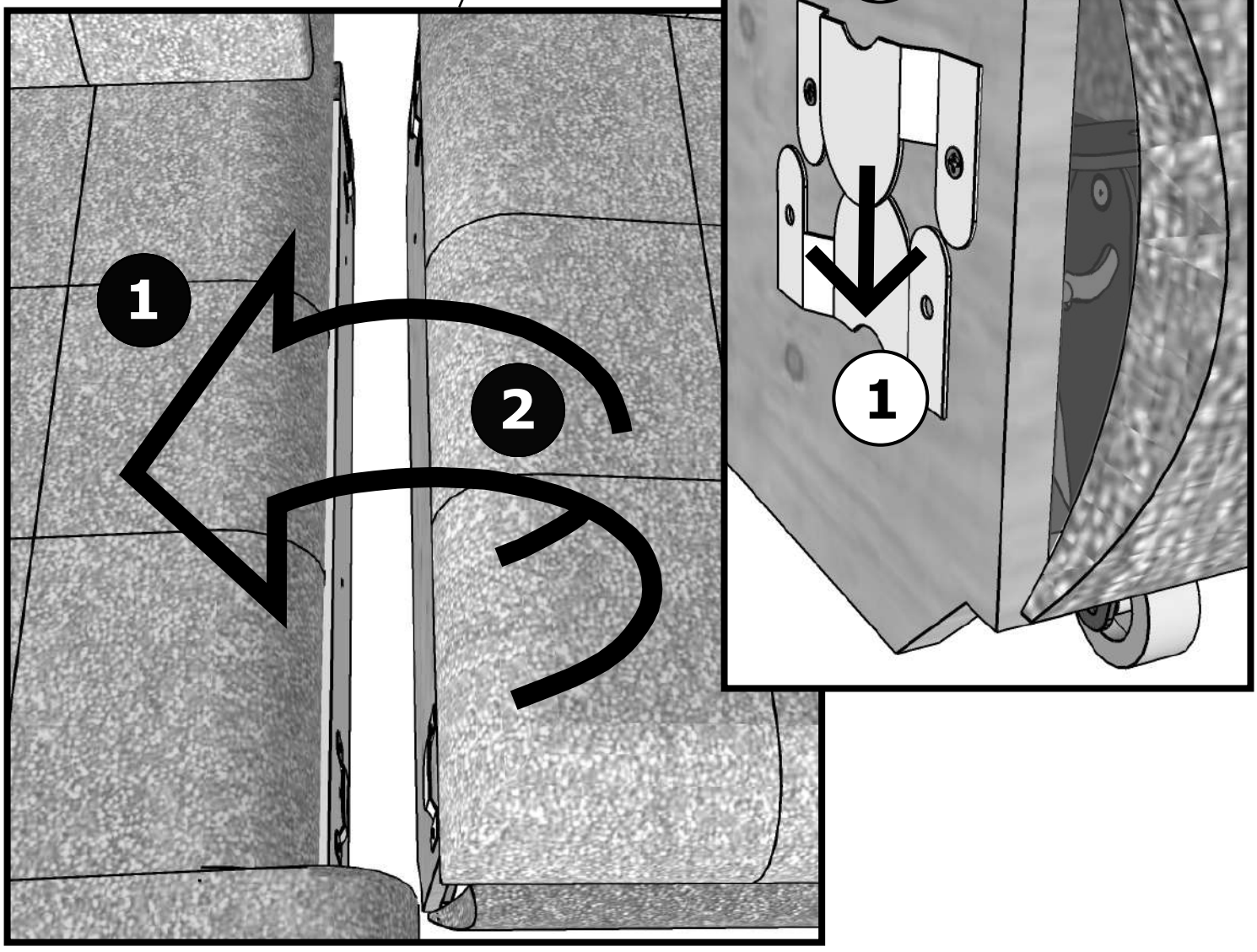

4

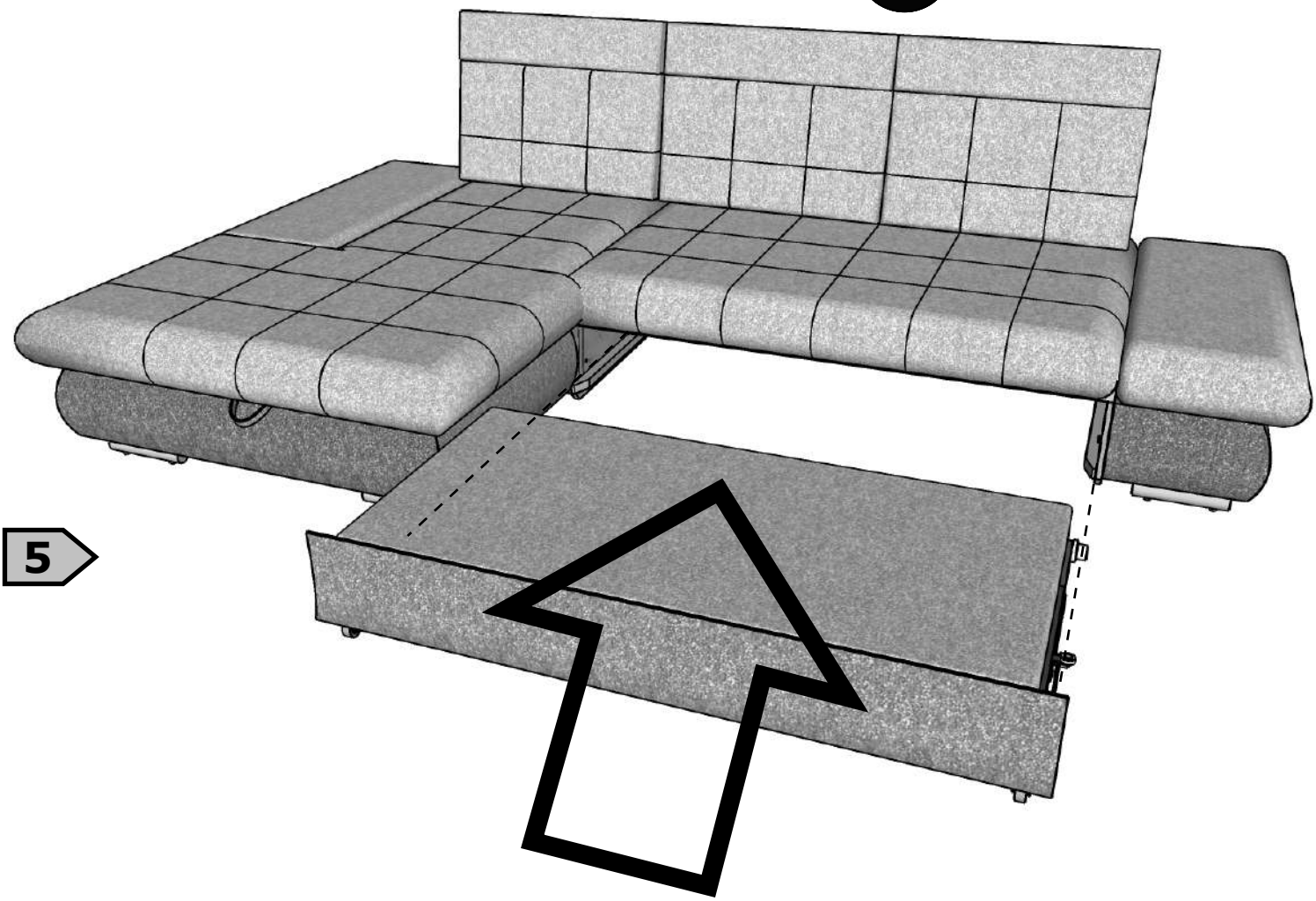

5

6

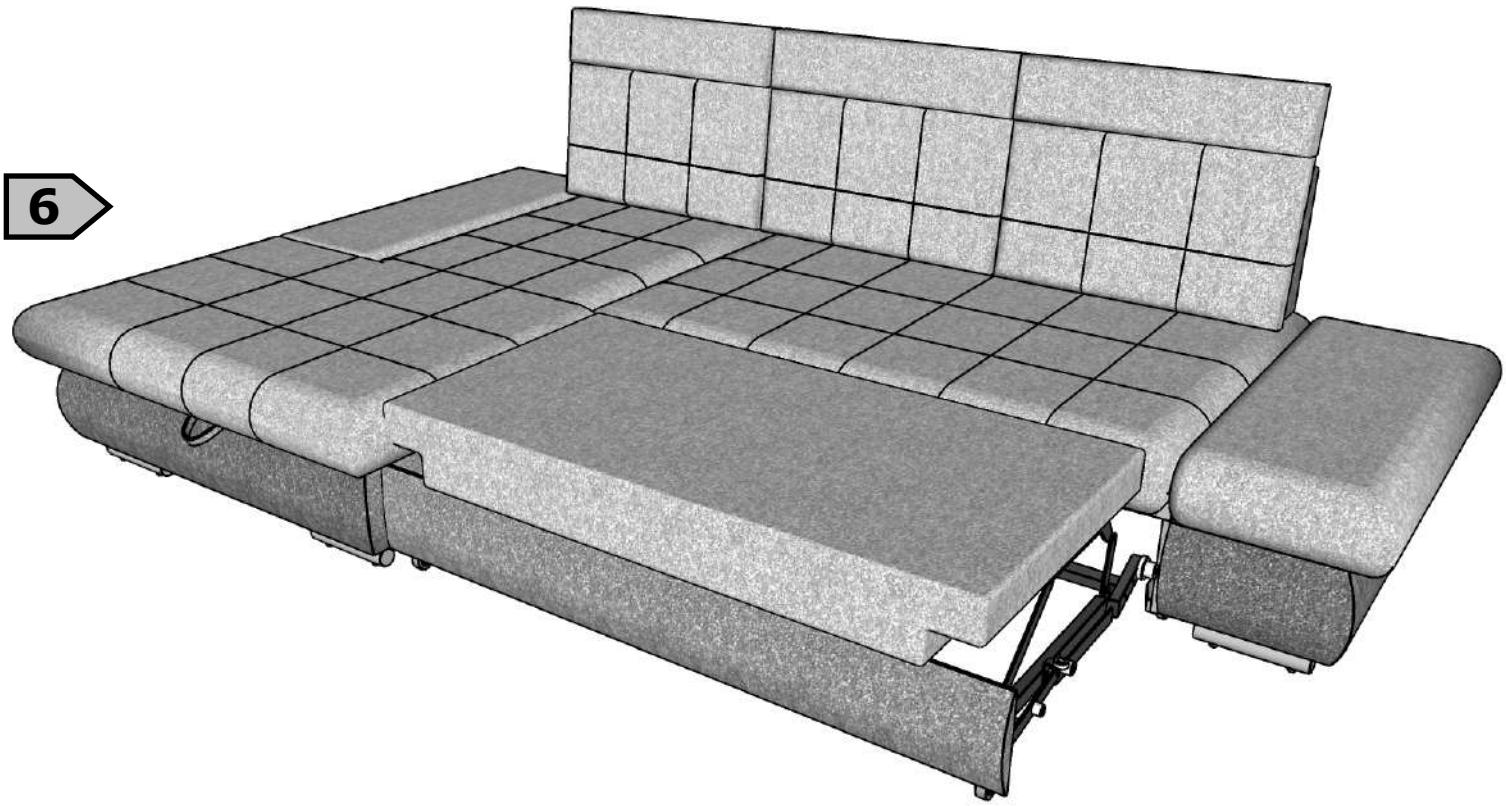

R



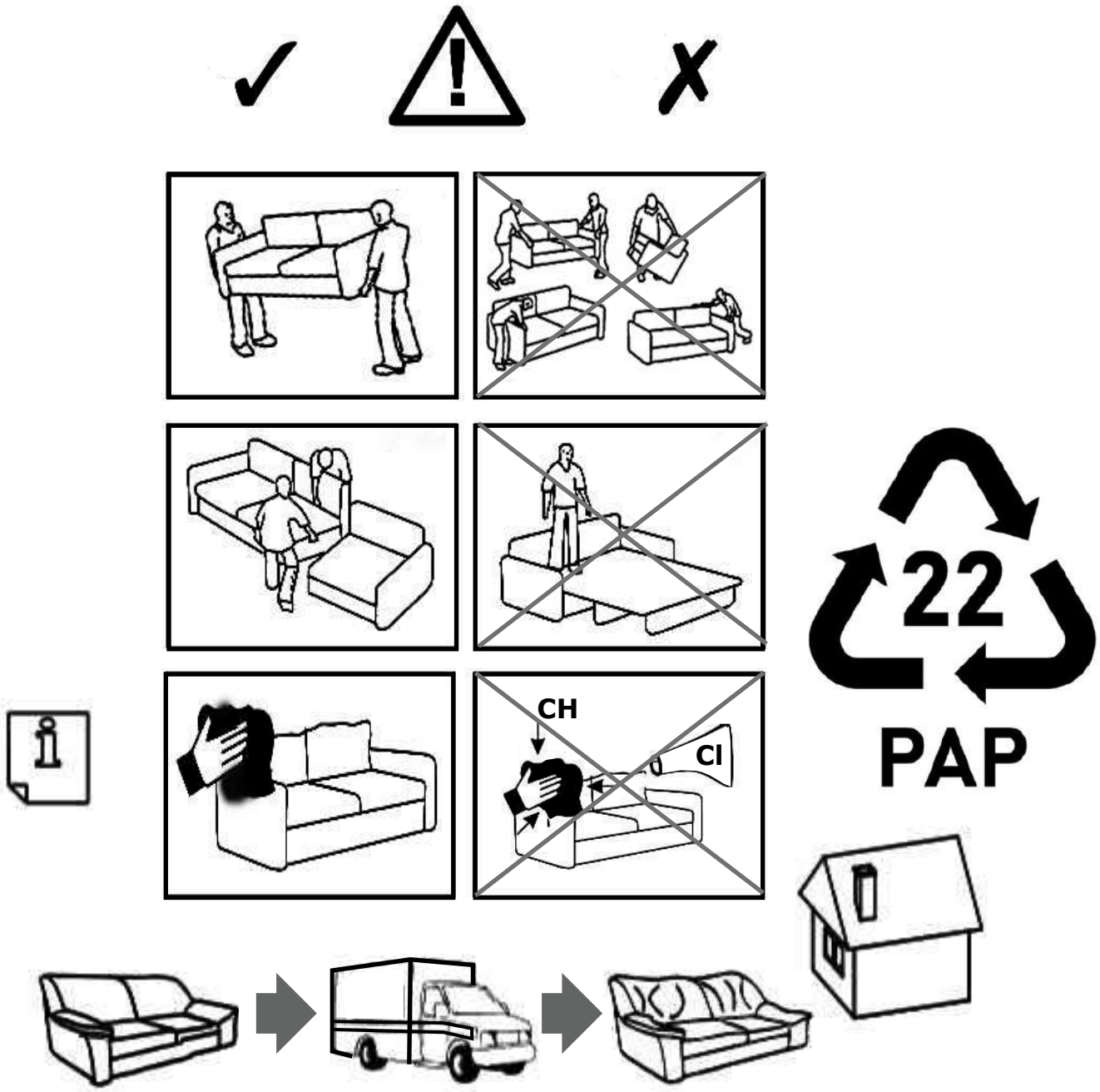
CH
Cl
22
PAP

