HOUSTON

R

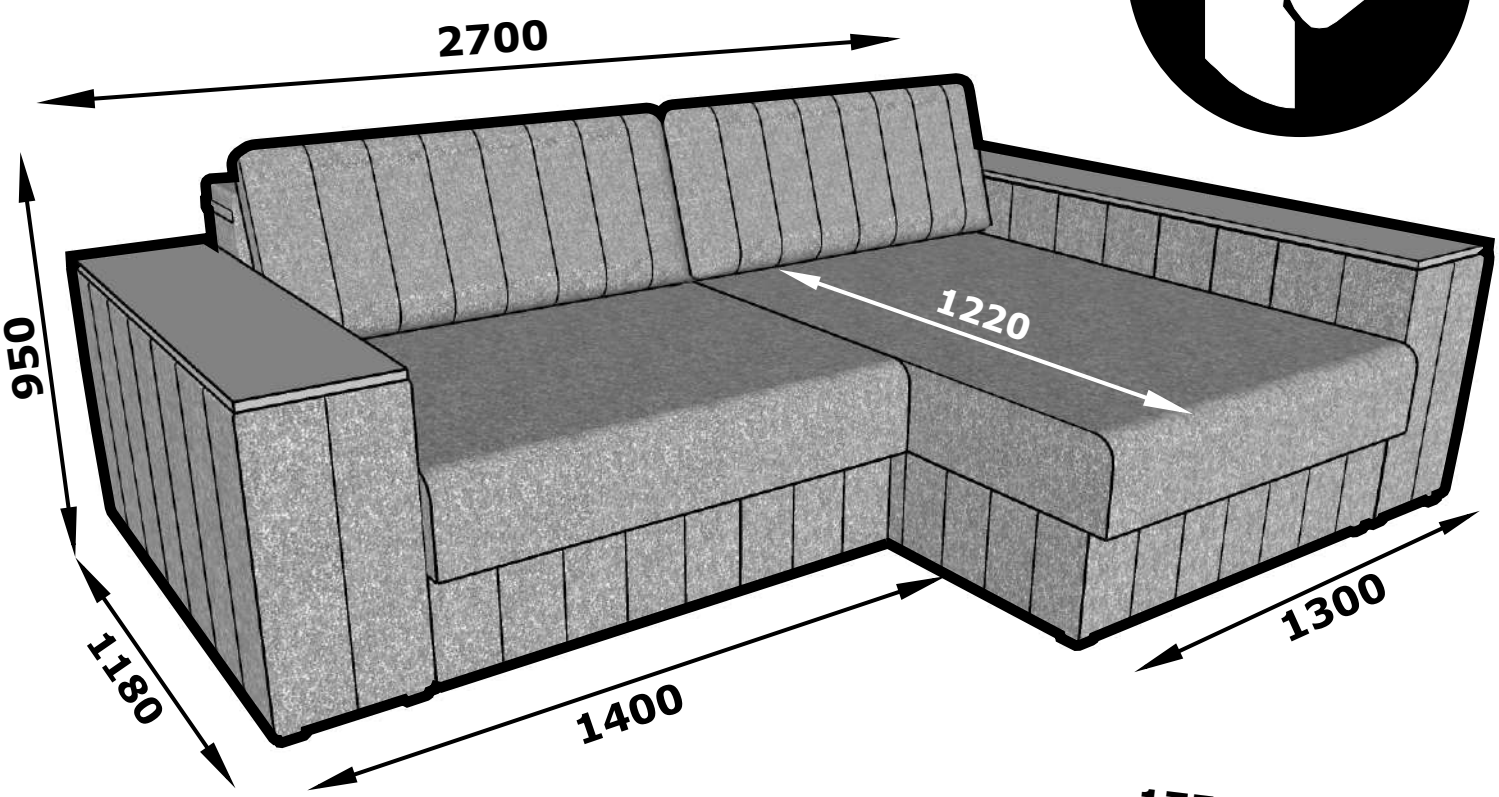

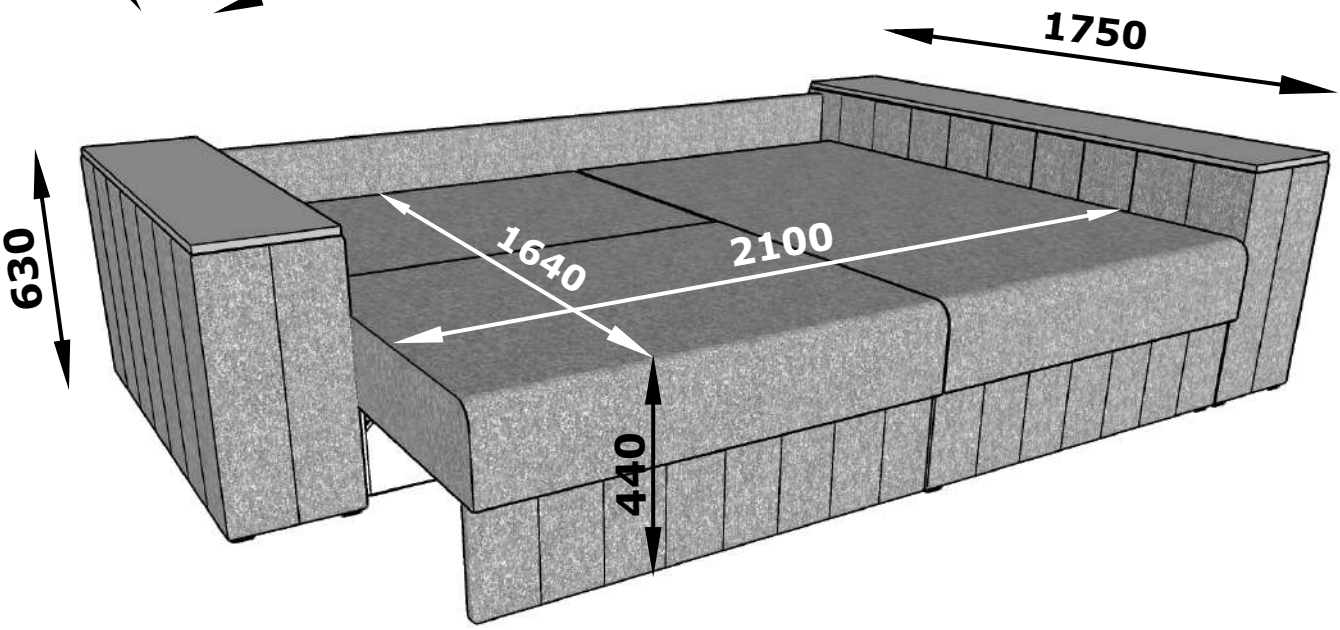

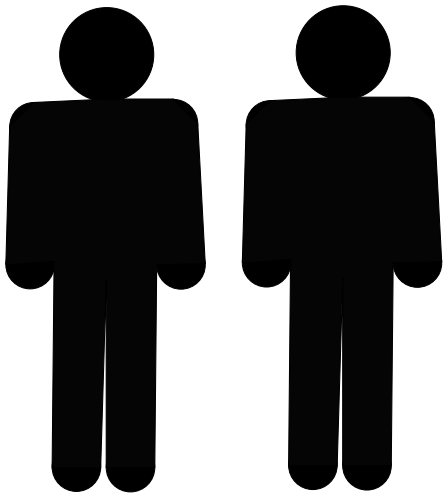

! +/-2CM





	L	B	H	PCS	
1	1640	1000	440	x1	1/5
2	1100	870	650	x1	2/5
3	1100	770	210	x1	3/5
4	1180	630	300	x1	4/5
5	1750	630	300	x1	5/5

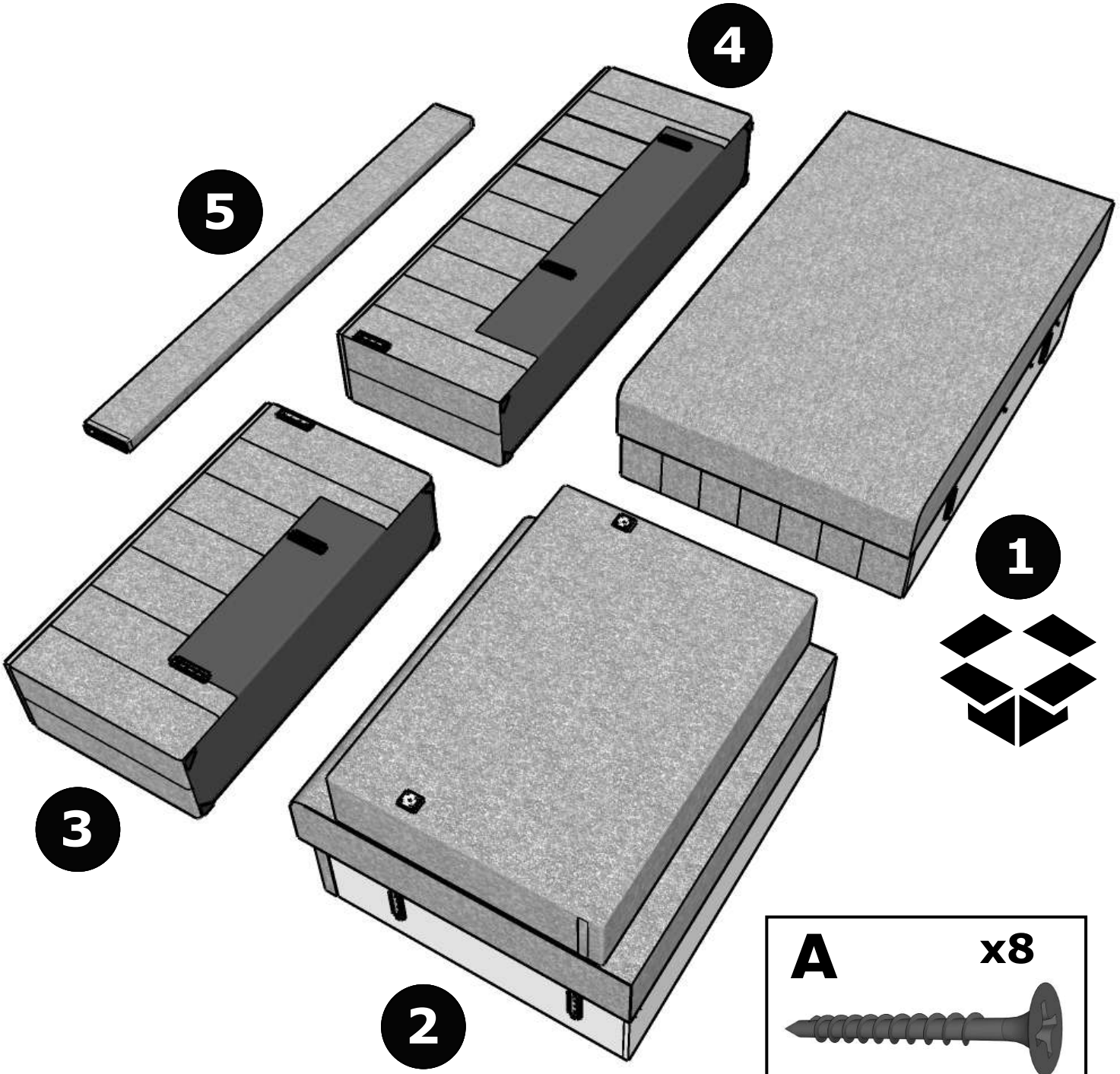

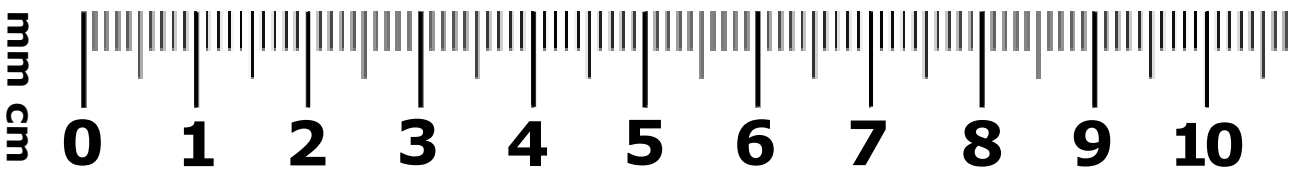

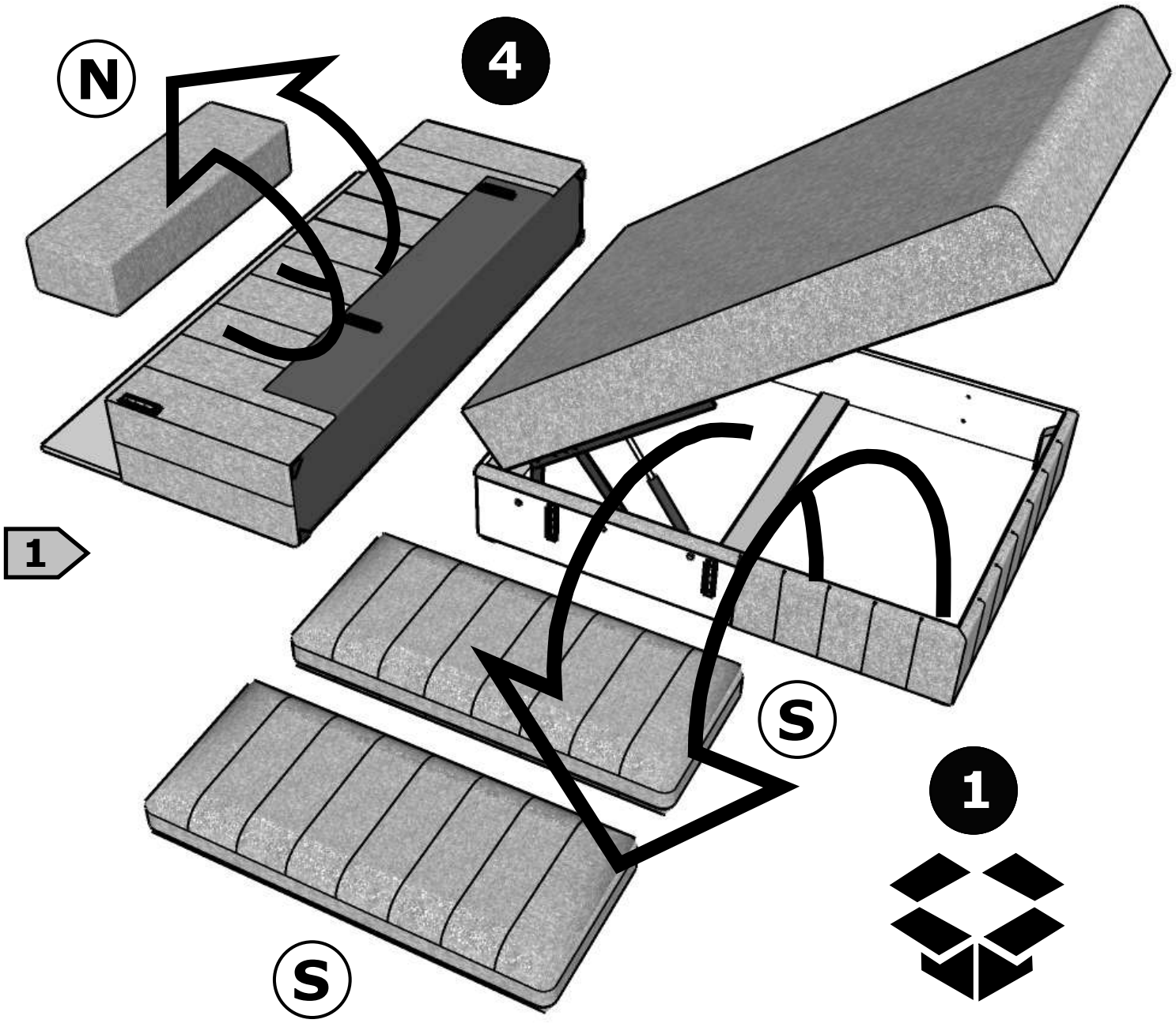
N
4
1
S
1
S

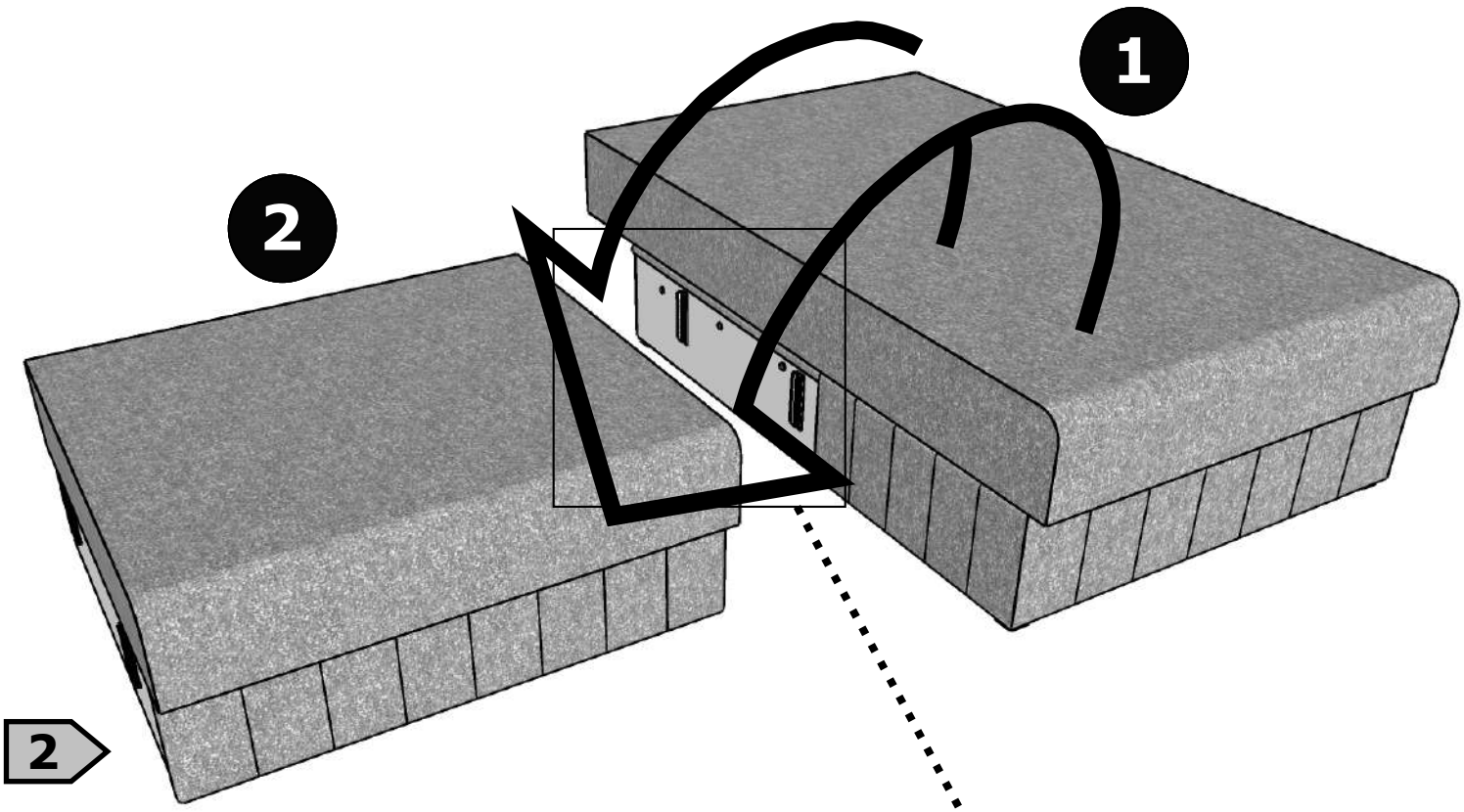
1
2
2

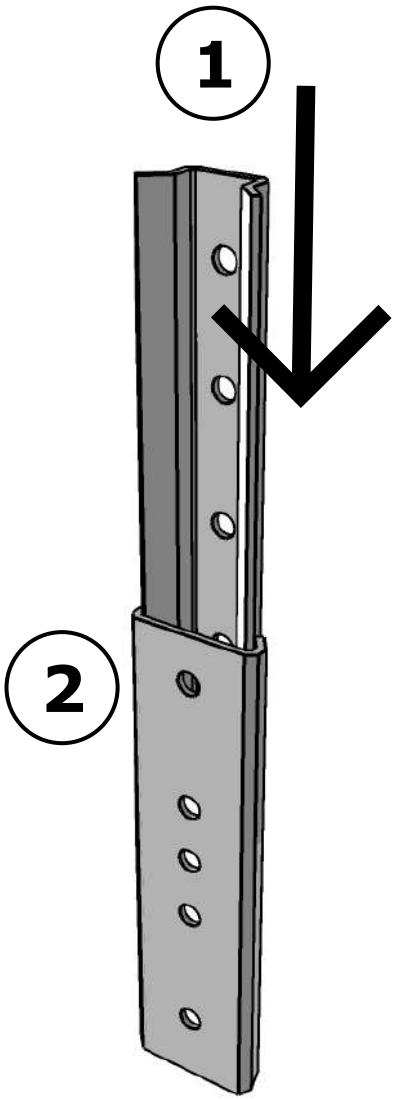
1
2

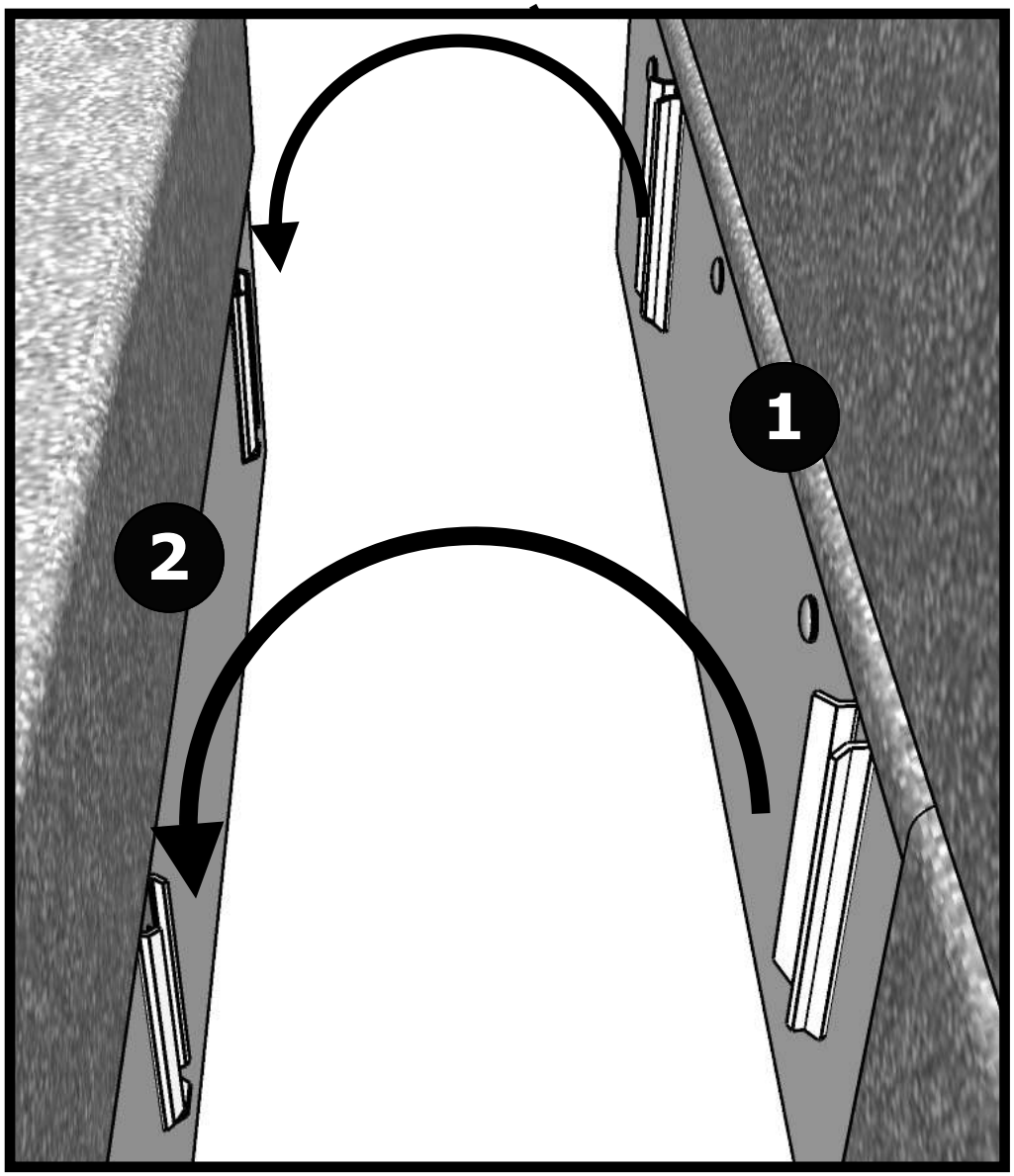
1
2

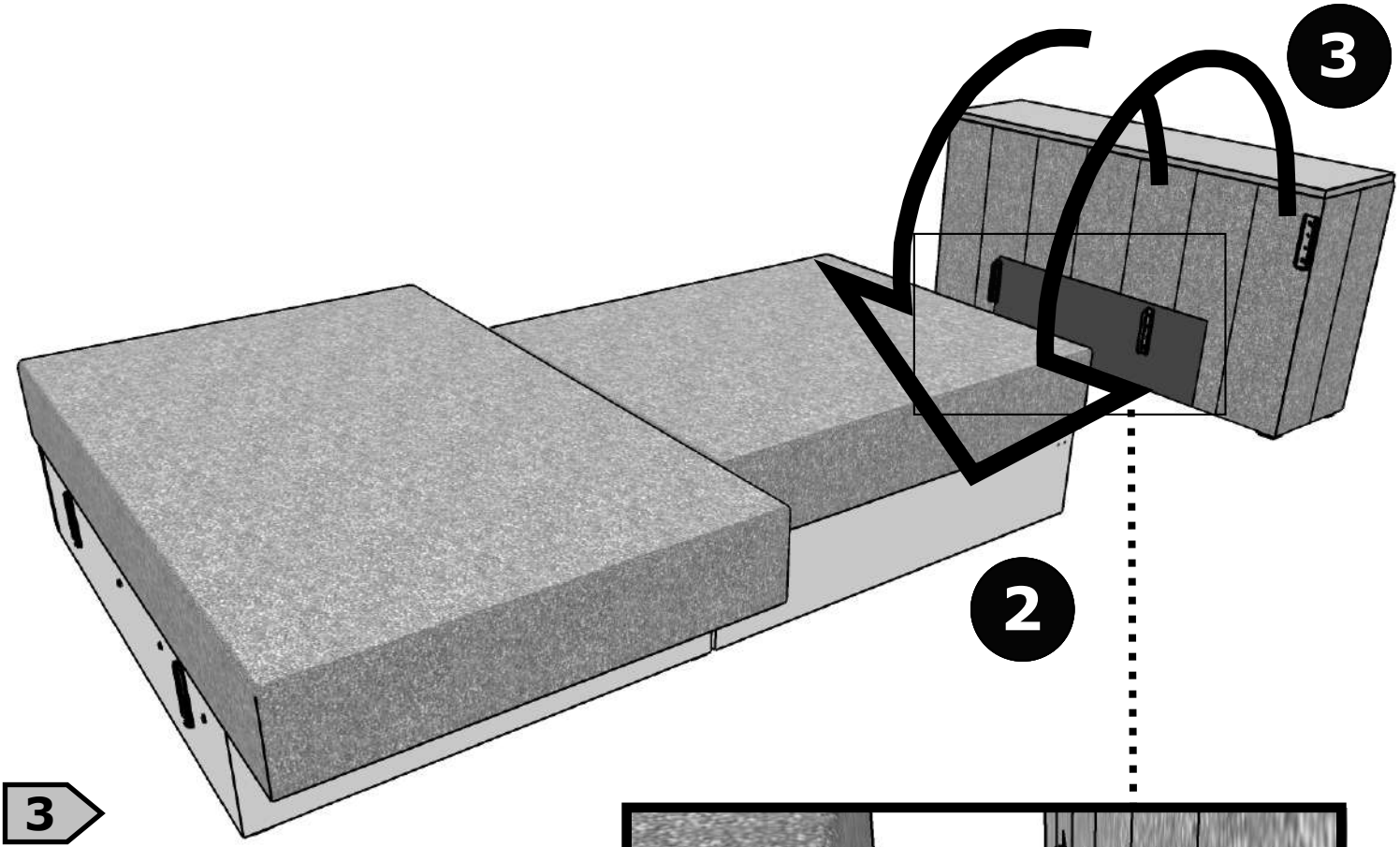

3

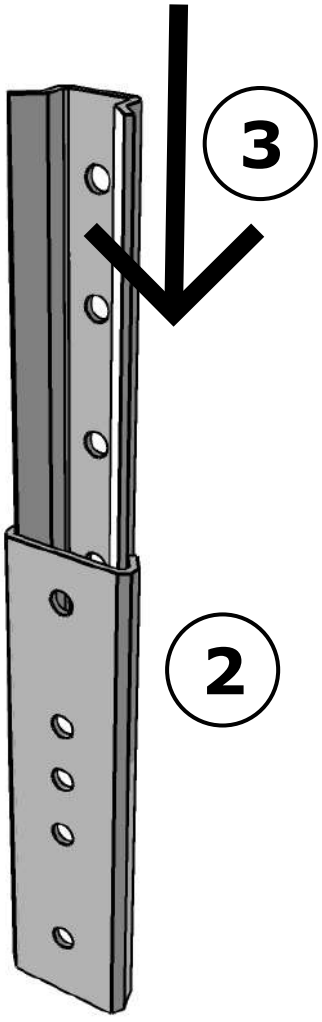

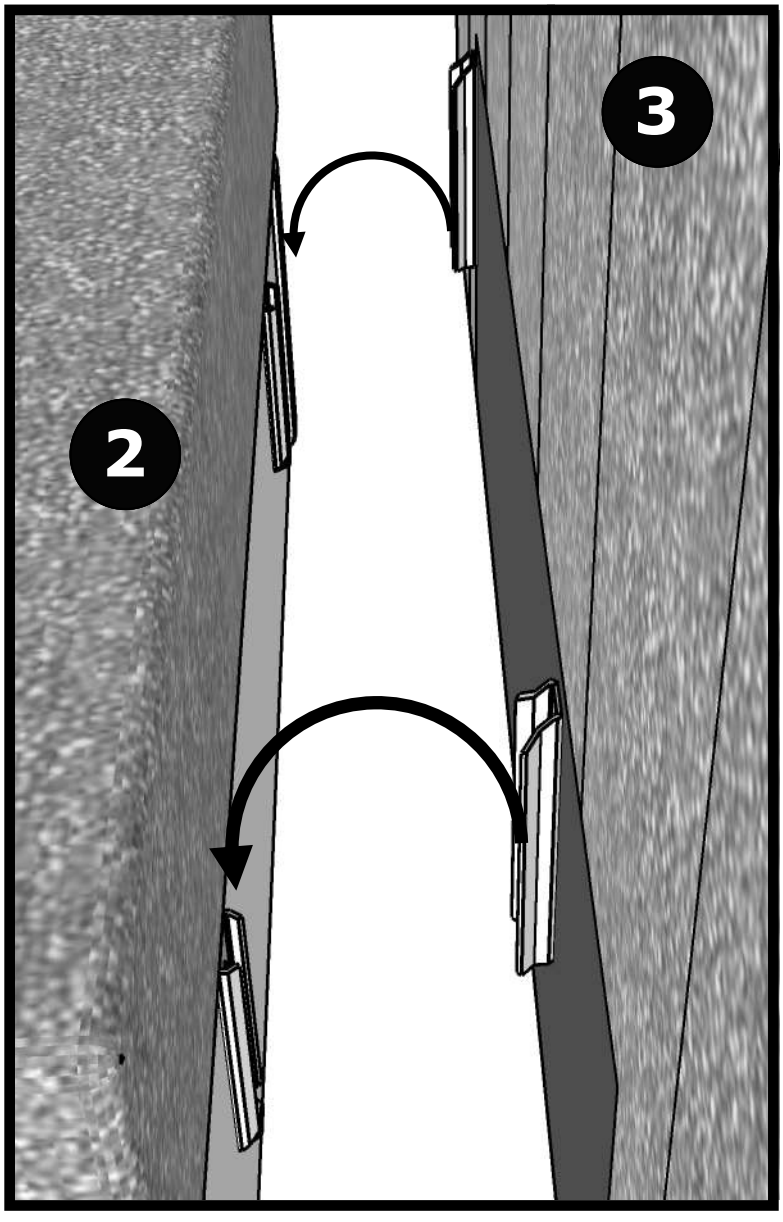

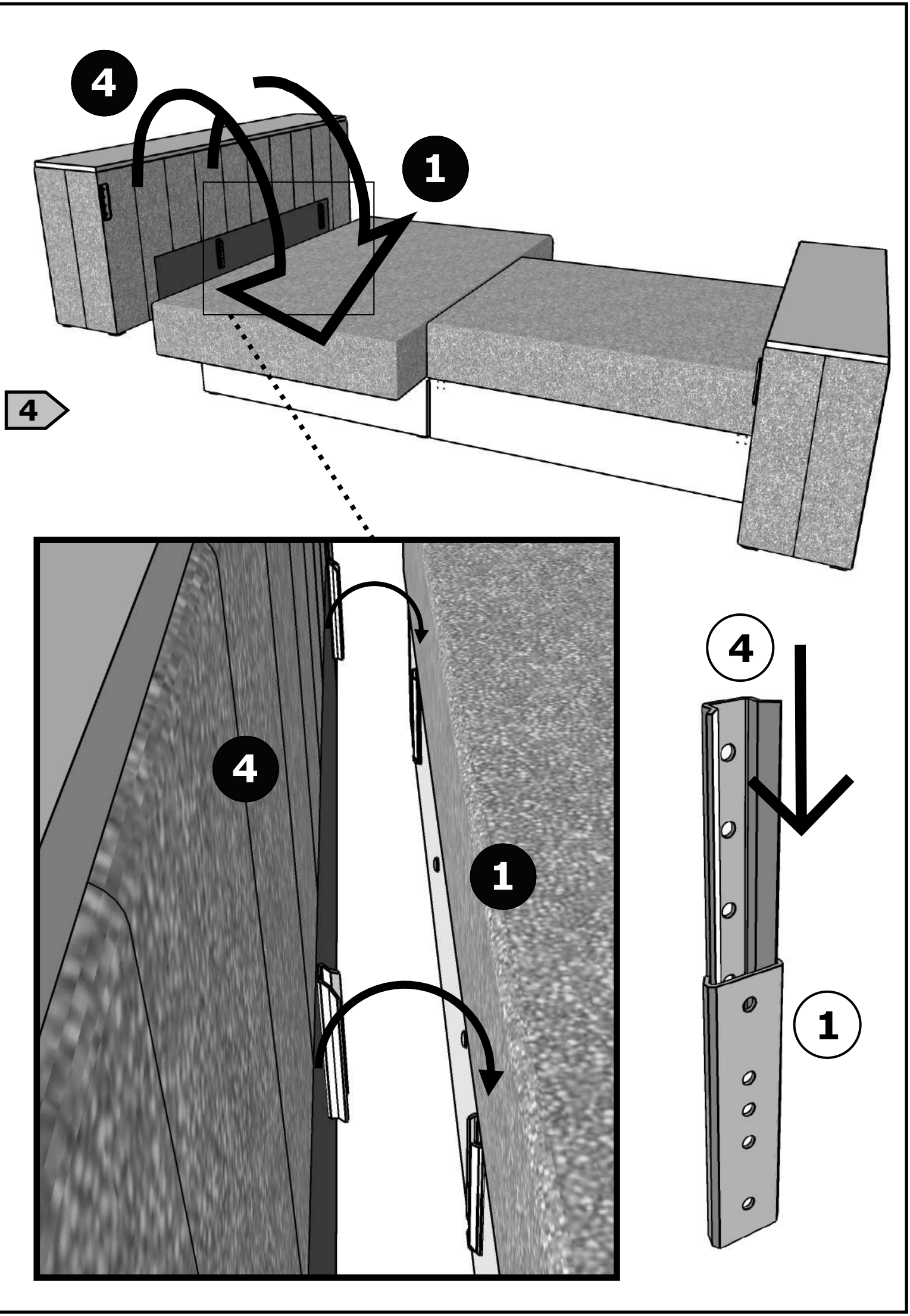
4
1
4
4
1
4
1

5

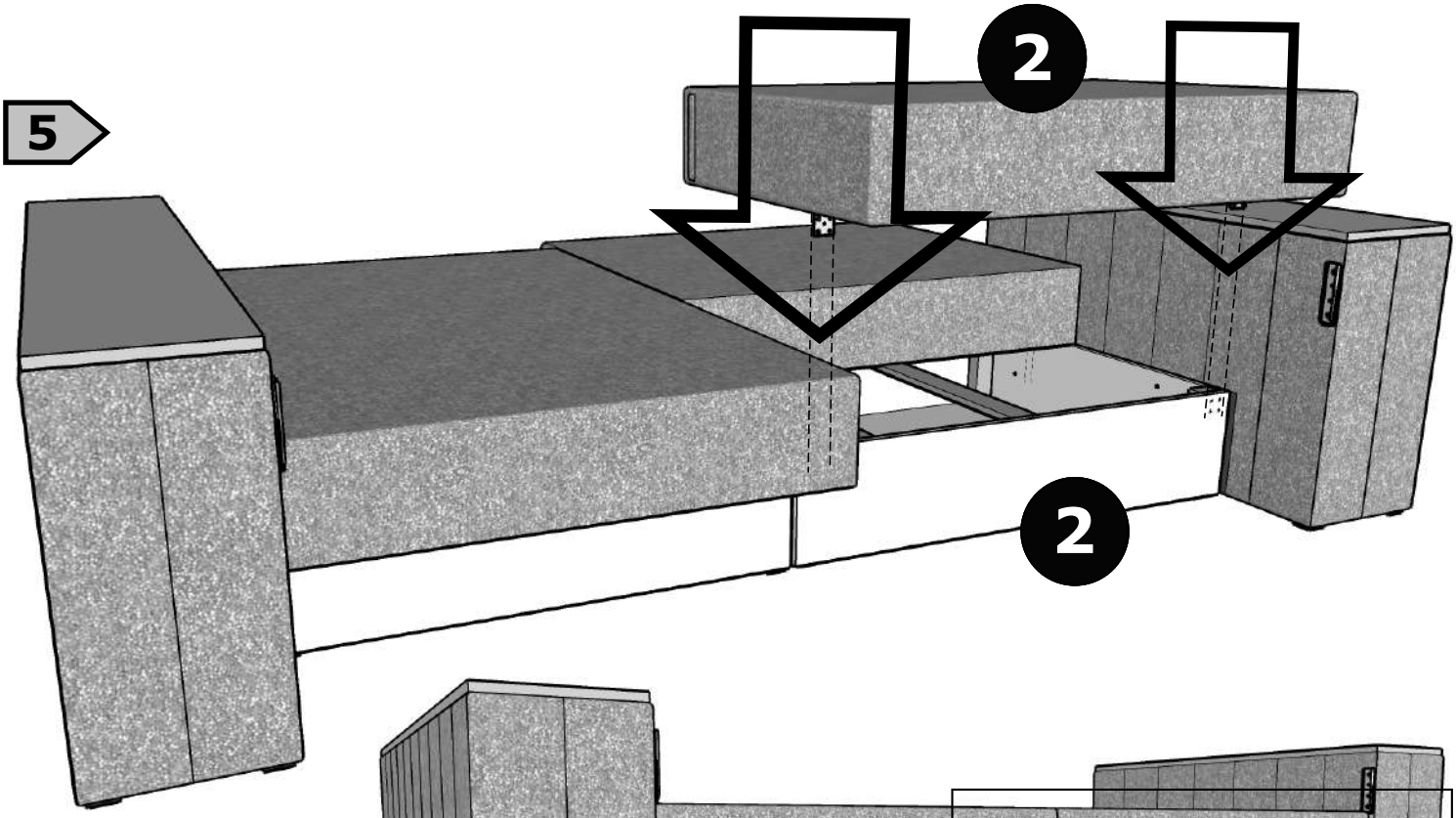

6

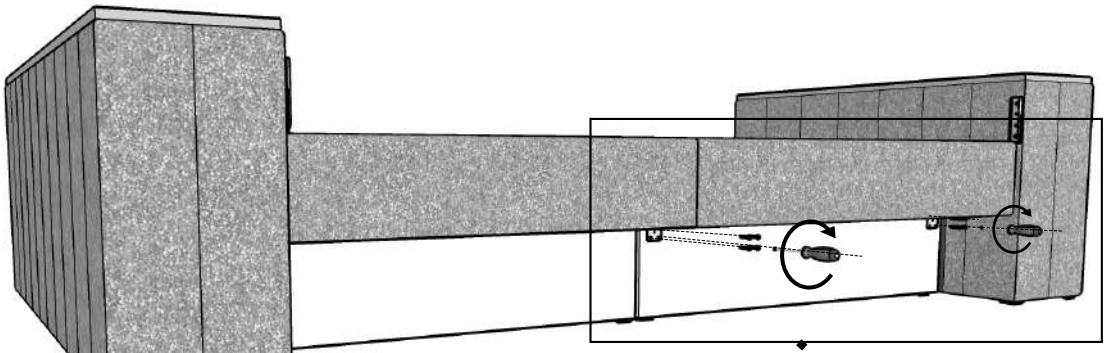

A

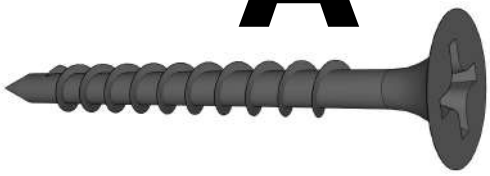

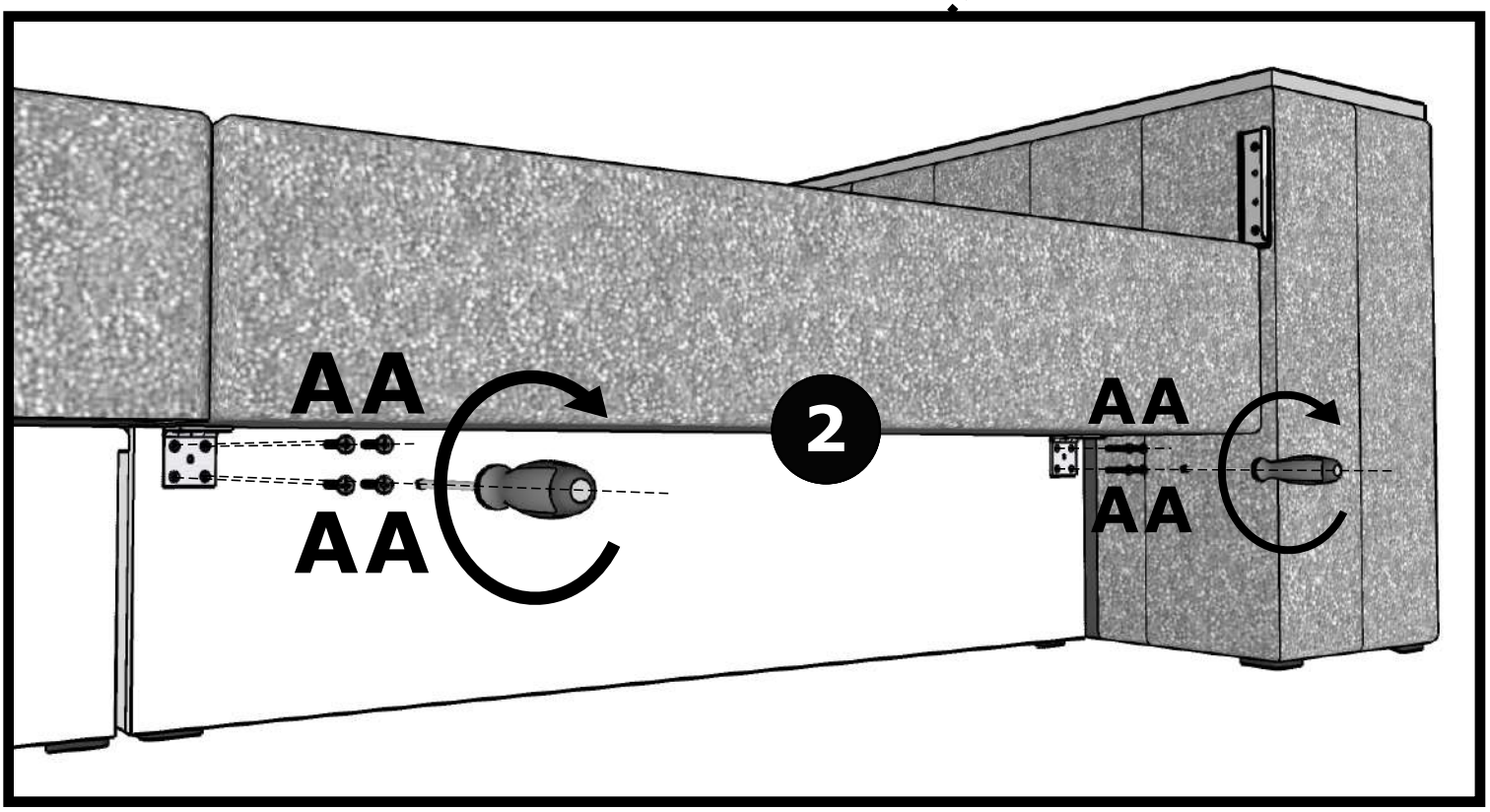

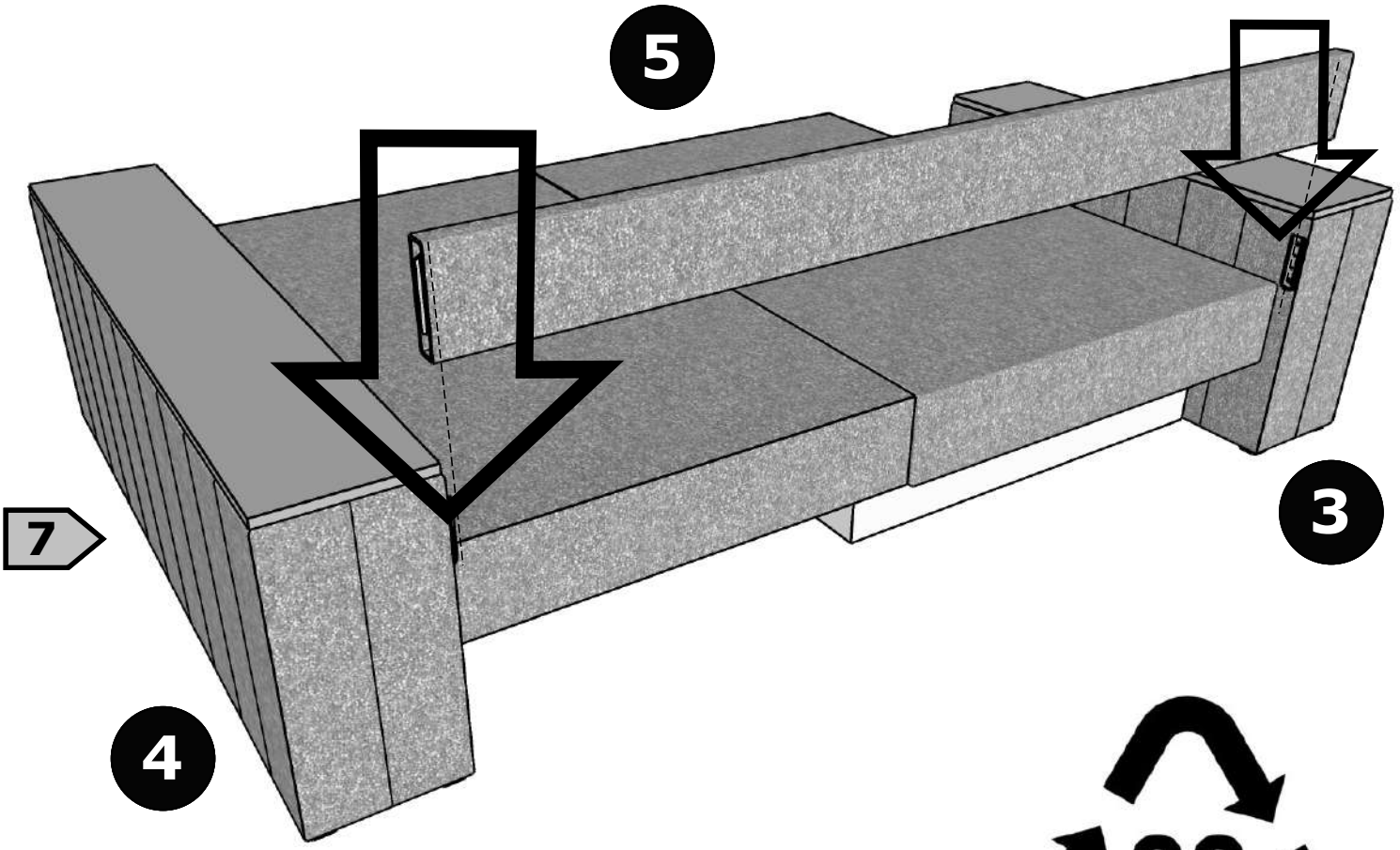
5
3
7
4

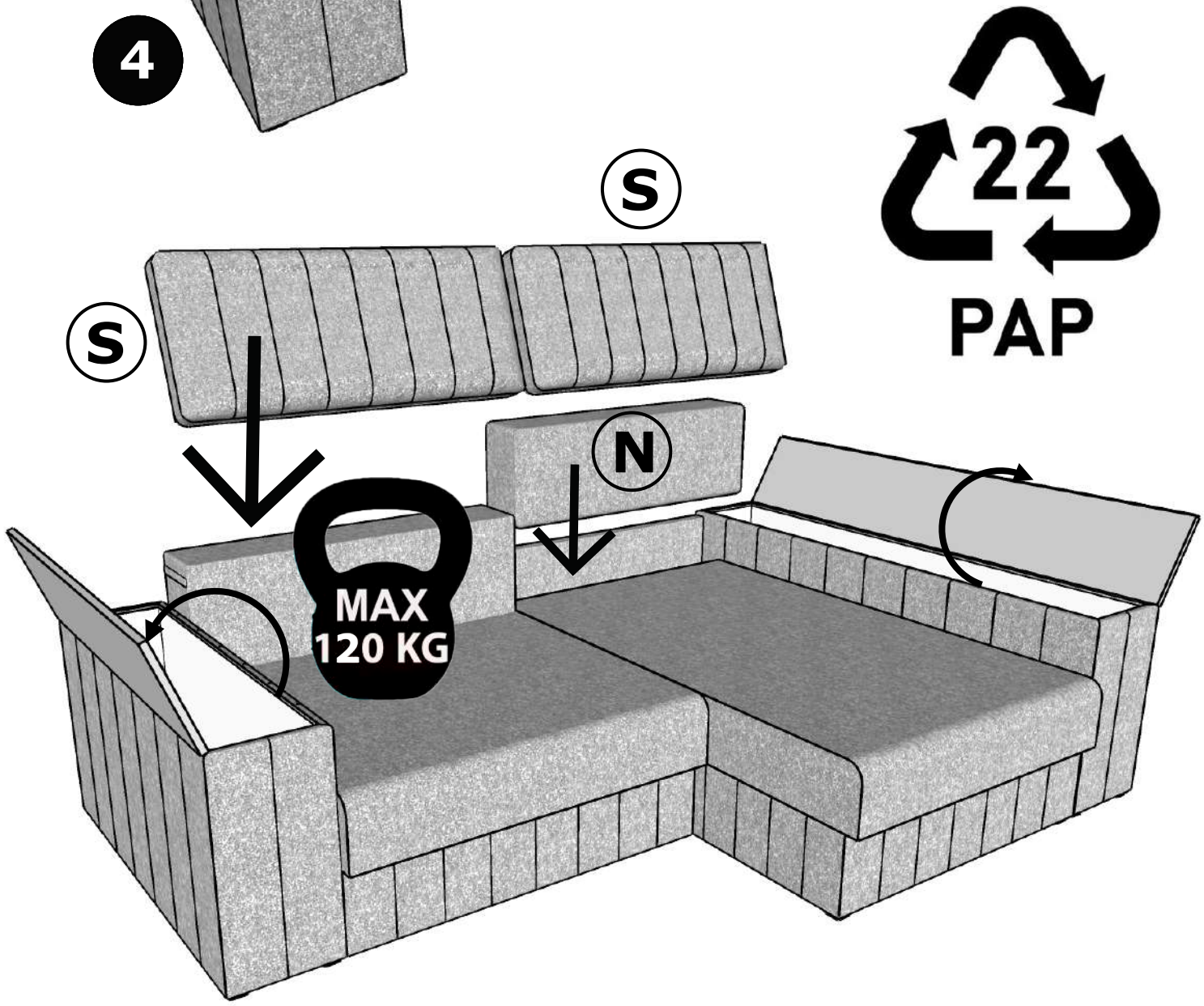
S
S
N
MAX
120 KG

22
PAP